Department of Health
and Social Security

Welsh Office

MCO208

Please return to
ROSEMARY GLANVILLE
MARU: Environmental Design
Polytechnic of North London
Holloway Road, London N7 8DB

May 1972

HMSO £1.00 net

HOSPITAL TECHNICAL MEMORANDUM

PIPED MEDICAL GASES, MEDICAL COMPRESSED AIR AND MEDICAL VACUUM INSTALLATIONS

22

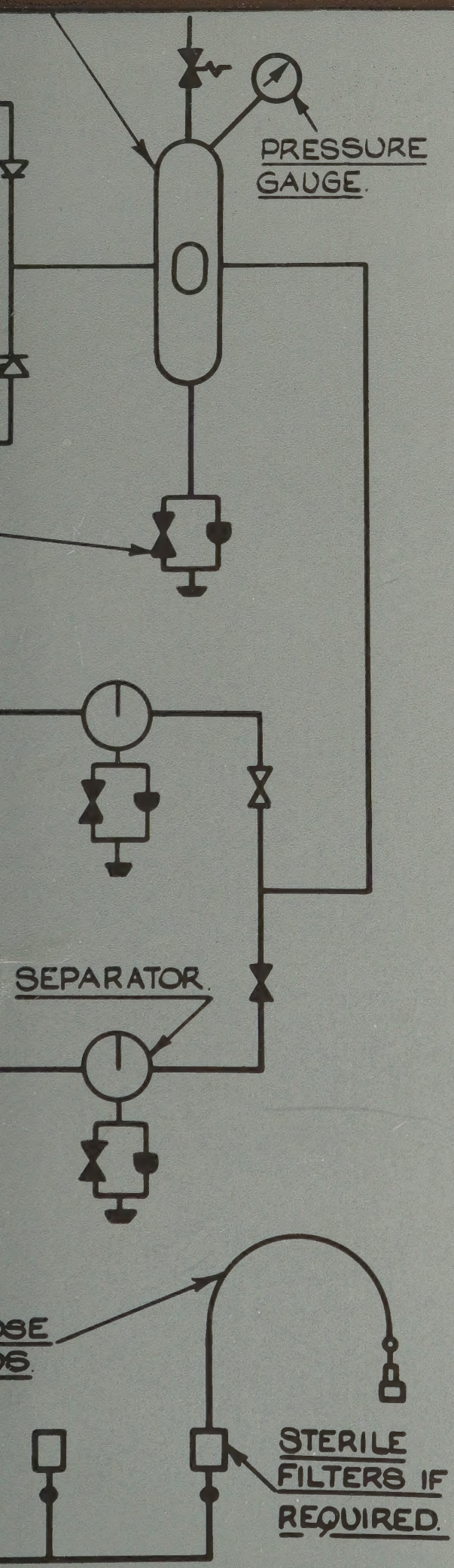

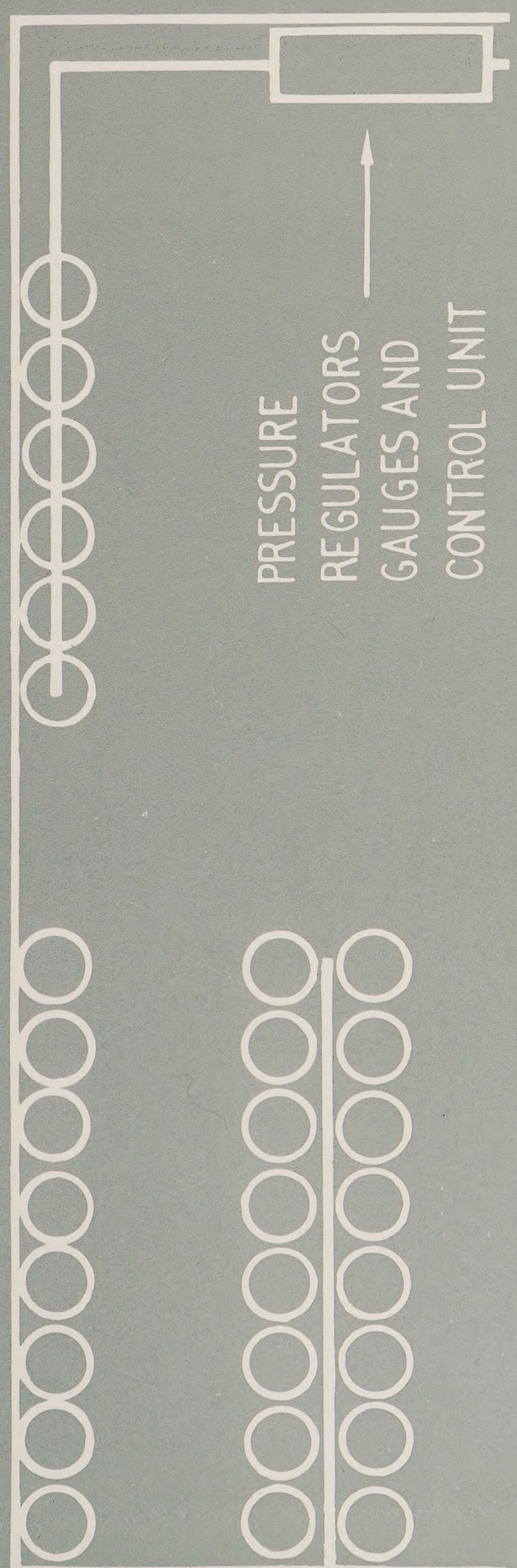

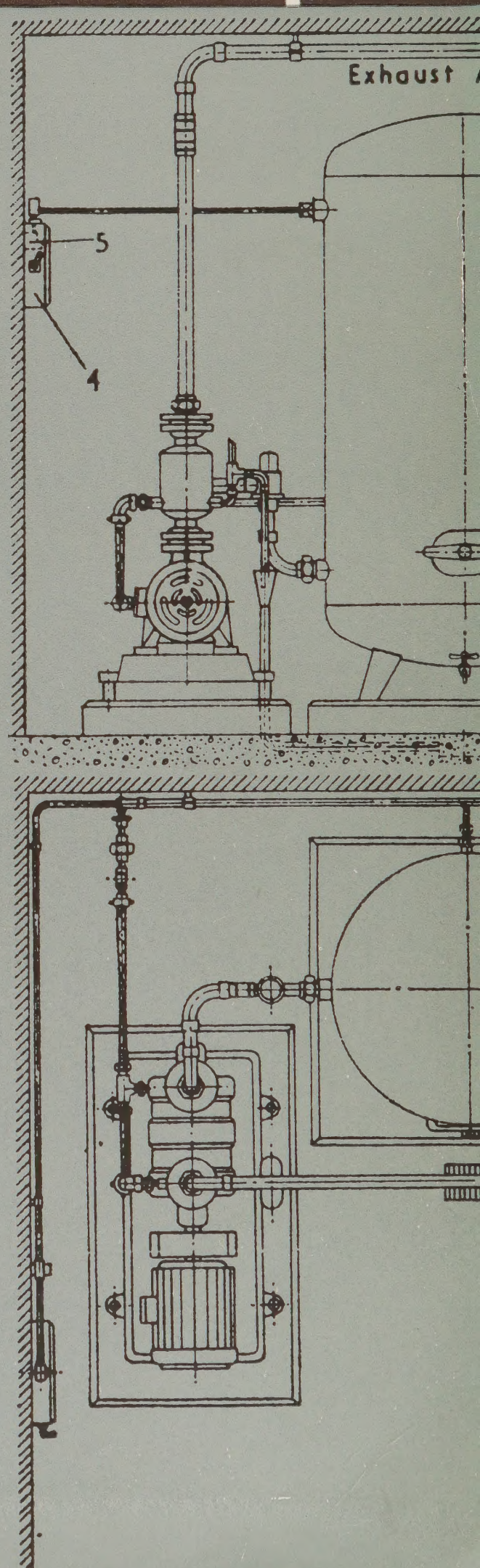

Department of Health and Social Security: London

Welsh Office: Cardiff

Hospital Technical Memorandum Number 22

Piped Medical Gases, Medical Compressed Air and Medical Vacuum Installations

CONTENTS

		Paragraph
I	Scope	1
II	Operational considerations	3
III	Safety—main principles	5
IV	Points of design common to most P.M.G. and V. installations	9
V	Gas flow rates and pipe line design procedure	30
VI	Installation procedure	62
VII	Gas cylinder manifold installations	78
VIII	Liquid oxygen installations	95
IX	Medical compressed air installations	106
X	Vacuum plant installations	158
XI	Alarm system	177
XII	Electricity supply to medical gas installations	192
XIII	Accommodation for medical gases, compressors and vacuum pumps	197
XIV	General fire and safety precautions	210
XV	Testing and commissioning	219
XVI	Maintenance	249

	Pages
Appendices, Numbers 1–29	39
References	76
Index	77

Appendix No		Page
1	Gases for pathology laboratory	39
2	Dental department—piped vacuum installation	41
3	Scales for provision of terminal units	43
4	Colour code identification for medical gas terminal units and pipe installations	45/46
5	Special fittings for the supply of medical gases and vacuum in operating theatres	47
6(*a*)	Typical oxygen consumption rates	48
(*b*)	Typical nitrous oxide consumption rates	48
7	Details of equipment requiring medical compressed air	49
8	Minimum total design flow for oxygen for general wards only	51
9	Typical arrangement for oxygen and vacuum risers and distributors	52
10	Calculation of flow in main oxygen risers and distributors as in Appendix 9	53
11	Minimum total design flow for vacuum for general wards only	54
12	Calculation of flow in main vacuum risers and distributors as in Appendix 9	55
13	Typical automatic manifold arrangement	56
14	Typical layout of manifold room	57
15	Typical arrangement of combined manifold and gas cylinder storage rooms	58
16	Piped medical compressed air installation	59
17	Plan for medical air compressor plant room	60
18	Typical arrangement of desiccant dryer	61
19	Typical vacuum plant layout using water-sealed pumps	62
20	Typical vacuum plant layout using oil-lubricated pumps	63
21	Typical plan of medical vacuum plant room	64
22	Typical operating curves for vacuum pumps	65
23a	Principle of annunciator and visual alarm unit (Flashing lamp system)	66
23b	Steady lamp system	67
24	Layout of alarm system elements	68
25	Temperature/pressure relationships for pressure pipe systems (Imperial units)	69
26	Temperature/pressure relationships for pressure pipe systems (metric units)	70
27	Temperature/pressure relationships for vacuum systems (Imperial and metric units)	71
28	Flow rate and delivery pressure test unit for pressure gas systems	72
29	Flow rate and vacuum level test unit for vacuum systems	76

LIST OF SUB-HEADINGS

	Paragraph
Points of design common to most P.M.G. and V. installations	
Portable flowmeters	9
Scale of terminal units	10
Design of terminal units	11
Location of terminal units	12
P.M.G. and V. for operating theatres	15
Permanent hose connections and hoses	19
Fixed pipe lines	21
Fittings and valves—general	23
Valves	24
Valve boxes	29
Gas flow rates and pipe line design procedure	
Consumption of oxygen and nitrous oxide	30
Flow rates required at terminal units	31
Oxygen flow rates for hyperbaric chambers	33
Flow rates in oxygen, nitrous oxide and medical gas mixture pipe lines	34
Flow rates for compressed air pipes and compressors	41
Flow rates for vacuum pipes and pumps	43
Pressure drop in pipe lines	51
Pipe sizing practice	54
Spare pipe line	61
Installation procedure	
Accommodation of pipes	62
Pipework supports	69
Gauges on the distribution system	76
Identification of pipe lines	77
Gas cylinder manifold installations	
General design	78
Sites for gas manifold rooms	88
Design for manifold rooms and gas cylinder stores	89
Vehicle access for manifold rooms and cylinder stores	94
Liquid oxygen installations	
General design	95
Sites for liquid oxygen storage	101
Construction of liquid oxygen storage compounds	102
Medical compressed air installations	
General design	106
Air pressure control in plant room	116
Air pressure control for special sections of the distribution system	117
Pressure control at terminal units	119
Air inlet filters for compressors	121
Air compressors	122
After-coolers	130
Air receivers	133
Separator	134
Activated charcoal filters	135
Air drying	136
Air dryers	139
Dryer final filter assembly	152
Compressor control system	156
Emergency operation for compressed air supplies	157
Vacuum plant installations	
General design	158
Plant layout	159
Bacterial filters	160
Drainage trap	161
Vacuum discharge point	162
Vacuum pumps	163
Vacuum reservoir	171
Pump control system	175
Emergency operation of vacuum service	176
Alarm system	
General principles	177
Scale of warning and alarm systems	178
Design of alarm system	179
Audible alarms	182
Alarms for intensive therapy unit and special baby care unit	183
Location of warning and alarm indicators	184
Principles of annunciating alarm system with flashing alarm lights	185
Principles of annunciating alarm system with steady alarm lights	189
Provision, installation and connection of signal light fittings and alarms	190
Electricity supply to medical gas installations	
General principles	192
Earthing	194
Installation of electric cables	196
Accommodation for medical gases, compressors and vacuum pumps	
General principles	197
Sites for plant rooms	198
Noise control	202
Storage rooms for other gases on hospital sites	204
Electrical installation in manifold rooms and plant rooms	207
Heating of manifold rooms, plant rooms and full cylinder stores	208
Ventilation of manifold rooms, plant rooms and full cylinder stores	209
General fire and safety precautions	
General principles	210
Restriction on use of storage accommodation	211
Notices	214
Access to manifold rooms and liquid oxygen storage area	216
Fire detection system	217
General safety precautions	218

	Paragraph
Testing and commissioning	
General principles	219
Pressure test for leakage in pipe lines of pressure gas systems	227
Test for leakage on vacuum systems	228
Valve tightness tests	229
Relief valve test	230
Test for leakage on completed installations —pressure gas systems	231
Test for leakage on completed installations —vacuum systems	232
Tests for proving correct connections to all P.M.G. and V. systems	235
Total flow rate and delivery pressure test	240
Tests of manifold change-over valve	243
Plant operation tests	244
Signalling systems test	245
Purging medical gas installations	246
Gas identification and air purity check	247
Maintenance	
General principles	249
Overhauls	253
Exclusions	254
Organisation	255
Records	256
Maintenance of filters	257
Maintenance of local water treatment equipment	258
Maintenance of air treatment plant	259
Equipment check lists	260

LIST OF TABLES

		Page
1	Pressure loss across terminal units	7
2	Conversion factors for units commonly used in connection with medical gases and vacuum	7
3	Flow rates required at terminal units	10
4	Oxygen flow rates for hyperbaric chambers	10
4a	Flow rates in oxygen and nitrous oxide pipe lines	11
5	Medical gases pipe line sizing, using new British Standard for copper pipes	14
6	Medical compressed air pipe line sizing, using new British Standard for copper pipes	15
7	Medical vacuum pipe line sizing, using new British Standard for copper pipes	15
8	Comparison between old and new British Standards for certain sizes of copper pipes	16
9	Approximate equivalent length of copper pipes for fittings	16
10	Intervals between copper pipe supports	17
11	Medical gas cylinders commonly used on manifolds	19
12	Details of typical liquid oxygen vehicles supplying hospital installations	21
13	Schedule of alarm signals.	31

I. Scope

1. This Technical Memorandum covers the design, installation, testing and maintenance of installations for the piped supply of medical gases, medical quality compressed air and medical vacuum.*

2. Installations provided for medical purposes should not be used to supply the pathology department or any laboratory,† workshop or purely mechanical services, (e.g. installations providing compressed air for medical services should not be used for air-operated control systems) because of the risk of contamination of the medical installation. Degradation could arise from the difference in construction techniques adopted for general mechanical services, as opposed to medical gas installations, from contamination by the other mechanical services equipment or by direct contamination by bacteria or lubricants or by industrial gases, fumes or odours. (Gases, compressed air and vacuum for laboratories and workshops should be supplied from independent installations which may be constructed on the lines described herein but use should be made of terminal units which are non-interchangeable with those provided for the medical installation. The separate installations required for pathology laboratories and for high-flow vacuum installations used with high-speed drilling techniques in the dental department are briefly described in Appendices 1 and 2.)

II. Operational considerations

3. The main design objective is to ensure that the installation shall be of adequate capacity, safe and reliable. This objective will not be achieved unless medical, nursing and administrative action is taken to introduce and enforce operational policies designed to minimise the dangers that may arise from misuse of the installations. Those policies should include a provision that no work, however minor, may be undertaken on any part of the installations without the knowledge and permission of the Responsible Officer, who will usually be the Hospital Engineer. The policies should also lay down the medical, nursing and administrative procedures to be adopted when a new or modified installation is to be handed over for use.‡

4. In very large schemes consideration should be given to spreading the total demand over two or more separate plant rooms, with inter-connections, as a precaution against hazards such as fire and flood.

III. Safety main principles

5. The installation of P.M.G. and V. pipe lines and plant should be entrusted only to firms specialising in this class of work and it may be desirable to restrict the work to firms who are able to offer maintenance contracts for the installations. Any work involving alterations or extensions or maintenance work on an existing system should be dealt with by using a properly designed "Permit-to-Work" system. All new work should be covered by a detailed specification.§

6. Special precautions are required when existing installations are to be altered or extended to prevent contamination of the parts of the system which will remain in use whilst work is in progress. The section to be modified should be physically isolated from the sections in use; the closure of isolating valves is insufficient for this purpose. This isolating procedure is not required when work is to be carried out on individual terminal units only.

7. It should be noted that extensions or additions to existing pipe line installations may change the flow rates and render the resulting pipe lines sub-standard, unless adequate provision is made for the additional load in the original design.

8. The terminal units for each service should be designed so that apparatus for any other service cannot be connected to them. (There is at present no national standard for terminal units and each of the main suppliers in this field has his own particular design which incorporates a means of preventing wrong connections, but it is not possible to insert the probes made by one manufacturer into the terminal units made by another. A British Standards Institution Committee is at present preparing a Standard covering these units.)

* The abbreviations P.M.G. and V. where used in this document indicate that the guidance covers piped medical gases, piped medical compressed air and piped medical vacuum installations as appropriate to the text.

† P.M.G. and V. installations may be taken into the anaesthetic department laboratory/workshops for use when testing anaesthetic equipment.

‡ P.M.G. and V. installations should be subject to a properly designed preventive maintenance (P.M.) procedure, using the "Permit-to-Work" system. The maintenance procedure is referred to in Hospital Technical Memorandum No. 13—Planned Preventive Maintenance—A System for Engineering Plant and Services.

§ Fire precautions and detailed requirements in design related to safety matters are dealt with in sections which follow.

IV. Points of design common to most P.M.G. and V. installations

Portable flowmeters

9. Portable bobbin type flowmeters, some of which incorporate regulators, can be plugged into the terminal units and these flowmeters are available as single or twin units. With twin flowmeters two patients can be supplied with oxygen from a single terminal unit provided the supply system can satisfactorily meet the demand. The appropriate number of twin flowmeters should be allowed for when calculating pipe sizes.

Scale of terminal units

10. The scales of terminal units currently allowed in Hospital Building Notes or proposed or recommended in other Department of Health and Social Security guidance documents is given in Appendix 3.

Design of terminal units

11. The features required in the standard terminal unit are:

(i) The unit should accept, retain and release the probe by means of a quick-release mechanism designed for single-handed operation.

(ii) An independent valve should be incorporated in the assembly, to permit maintenance on the outlet without the need for isolating the pipe line.

(iii) The unit should have a check valve which is self-sealing when the probe is removed.

(iv) The terminal unit/probe connection should be of the non-swivel type, so that secondary equipment, such as a flowmeter, is not tilted by the probe hose.

(v) A secondary locking mechanism should be incorporated, in order to prevent damage to auxiliary equipment by the accidental ejection of the probe.

(vi) The connecting probe, socket and check valve assembly for each medical gas should be designed to prevent interchangeability with equipment used for other medical gas supply systems.

(vii) The terminal units should be identified by labelling with the appropriate recognised name, abbreviation or symbol, and by colour coding as follows:

Oxygen	White
Nitrous oxide	French Blue, British Standard Colour 166*
Nitrous oxide/ Oxygen	French Blue/White quartering
Carbon dioxide	Light Grey, British Standard Colour 630
Medical compressed air	White/Black quartering
Medical vacuum	Primrose, British Standard Colour 354

This colouring is indicated in Appendix 4. The name and the colour should be permanent, and it should be impossible to transfer either to a terminal unit for a different gas. By "permanent" it is meant that the name should be etched, indented, raised or otherwise made comparatively indestructible, and that the coloured part should be made of coloured plastic, vitreous enamel or similar material, NOT painted.

(viii) Identification by shape is not essential but if it is adopted the following shape should be used:

Oxygen	Hexagon
Nitrous oxide	Circle
Nitrous oxide/ Oxygen mixture	Circle with two opposing flats
Carbon dioxide	Triangle with radiused corners
Medical compressed air	Circle with flat
Medical vacuum	Square

(ix) The pressure loss occurring across the terminal unit alone, when operated at the gauge pressure and flow rate shown in Table 1, should not exceed the figure given.

Location of terminal units

12. Terminal units should be mounted in positions which will give short routes for the flexible pipes connecting them to apparatus. These routes should not obstruct the movement of staff or equipment around the patient. The units should also be accessible for maintenance without disturbance to patients and without interfering with other services or equipment.

* B.S. 381C. See Bibliography for full titles of British Standards referred to in this publication.

TABLE 1

Pressure loss across terminal unit

Gas (1)	*Nominal gauge pressure at terminal unit* (2)		*Rate of flow* (3)	*Maximum pressure loss across terminal unit under conditions of pressure and flow given in columns 2 and 3* (4)	
	* *bar*	*p.s.i.*	† *litres/minute at S.T.P.*	*bar*	*p.s.i.*
Medical gases	3·9	57	40	0·035	0·5
Nitrous oxide/ Oxygen mixture	3·9	57	275	0·55	8
Medical compressed air	6·9	100	250	0·35	5
Medical vacuum	400 mmHg below standard atmospheric pressure of 760 mmHg		40	100 mmHg	

13. The recommended mounting height for flush mounted terminal units in new installations is 1·3m. (4 ft. 4 in.) to the centre of the socket. A mounting height of 1·6m. (5 ft. 2 in.) may be appropriate for extensions on those older installations which already have terminal units of the type in which the probes are inserted vertically. A 1·3m. (4 ft. 4 in.) mounting height may be too low if surface mounted terminal units are used because of the risk of damage when beds or lockers are moved; 1·5m. (5 ft.) may be a more appropriate height in intensive therapy areas where a "rail" system is used. The best position for wall mounted terminal units in theatres is nearest the head end of the table and in line with it.

14. Where more than one service is provided at one location the terminal units should be arranged in the following order from left to right as seen when facing the terminal units: Oxygen, nitrous oxide, medical gas mixtures, carbon dioxide, compressed air, vacuum.

TABLE 2

Conversion factors for units commonly used in connection with medical gases and vacuum

Unit	*millimetre of mercury mmHg*	*centimetre of mercury cmHg*	*inch of mercury inHg*	*foot of water ftH₂O*	*inch of water inH₂O*	*centimetre of water cm H₂O*	*pound force per square in. lbf/in²*	*kilogramme force per square centimetre kgf/cm²*	*kilonewton per square metre kn/m²*	*millibar mb*
millimetre of mercury=	1	0·1	0·039 37	0·044 6	0·535	1·359 5	0·019 3	$1·359\ 5\times10^{-3}$	0·133 3	1·333
centimetre of mercury=	10	1	0·393 7	0·446	5·352	13·59 5	0·193 4	$1·359\ 5\times10^{-2}$	1·333	13·33
inch of mercury=	25·4	2·54	1	1·134	13·59	34·53	0·491 2	0·3453	3·386	33·86
foot of water=	22·420	2·242	0·883	1	12	30·48	0·433 5	$304·8\times10^{4}$	2·989	29·89
inch of water=	1·868	0·186 8	0·073 6	0·083	1	2·54	0·036	$25·4\times10^{4}$	0·249	2·491
centimetre of water=	0·736	0·074	0·029	0·032 8	0·393 7	1	0·014	10	0·098 1	0·981
pound force per square inch=	51·71	5·171	2·036	2·307	27·68	70·31	1	0·070 3	6·895	68·95
kilogramme force per square centimetre=	735·65	73·56	28·96	32·808	393·7	1000	14·22	1	98·07	980·7
kilonewton per square metre=	7·50	0·750	0·295	0·334 6	4·015	10·2	0·145	$1·02\times10^{-2}$	1	10
millibar=	0·750	0·075	0·029 5	0·033 5	0·401 5	1·02	0·014 5	$1·02\times10^{-3}$	0·1	1

NOTE 1 As a part of the programme for the adoption of the metric system in the United Kingdom, special encouragement is being given to the use of S.I. units of which the millibar (1 mb=0·1kN/m²) is recommended for use with sub-atmospheric pressures, excluding very low pressures (high vacuum).

NOTE 2 To within one part in seven million, the torr is equal to the barometric millimetre of mercury (mmHg).

NOTE 3 Careful distinction should be made between sub-atmospheric pressures expressed in terms of the absolute pressure scale, and the gauge vacuum scale, the latter being expressed in terms of scale readings below the standard atmospheric pressure.

* 1 Bar=10^5 N/m² (See also Table 2). In practice the nominal pressure is likely to become rounded to the nearest whole Bar.

† Flow rates for medical gases are commonly expressed in litres/minute although by strict application of the S.I. system m³/sec might have been used.

This arrangement will apply whether the individual terminal units are separate or form part of an assembly. A vertical arrangement is more appropriate on certain types of theatre fittings, in this case the same order will apply but reading from top to bottom. For certain theatre fittings a circular arrangement is preferred, in this case the order should be followed in a clockwise direction.

P.M.G. and V. for operating theatres

15. A variety of special fittings is available to bring the P.M.G. and V. to convenient positions in the operating theatres. Conventional wall terminal units are invariably provided in addition to these special fittings. The following notes are intended to indicate the main features of the more common of the special fittings and some of them are illustrated in Appendix 5. Adjustable stops should be fitted as appropriate, to prevent damage to equipment and the theatre walls.

(i) Wall-mounted swinging boom—fairly simple mechanically, relatively cheap, can serve apparatus at either end of table when mounted on side wall.

(ii) Ceiling rose with hanging flexible tubes—simple, cheap, can serve apparatus at both ends of table but may obstruct movement of staff and apparatus.

(iii) Rigid columns, ceiling mounted—can serve apparatus at one end of table only, should be of substantial construction and securely mounted to resist large turning moments which can be produced by horizontal forces at lower end of pendant.

(iv) Ball-jointed columns, ceiling mounted—angular movement gives increase in the area covered but not usually enough to serve apparatus at both ends of operating table.

(v) Columns on overhead tracks—usually rigid, can serve apparatus at either end of table, mechanically complex, difficult to clean.

(vi) Telescopic versions of (iii), (iv) and (v)—slight increase in convenience of use, more complex mechanically.

(vii) Fixed outlets at base of operating table—simple but should have protection against damage and ingress of water during cleaning; flexible connections along floor or in conduit in screed may be considered a disadvantage; low level of outlets is a disadvantage if frequent connection and disconnection is required (e.g. in short operations); sterilization of under-floor vacuum pipe lines presents difficulties and they are therefore not recommended.

(viii) Fixed service units or blocks, sometimes called "bornes"—permanently mounted on the theatre floor for use in conjunction with mobile operating tables, suffer from same disadvantages as (vii) and present a serious risk to operating theatre staff and others who may trip over them when the mobile table has been removed and they are therefore not recommended.

16. Before a decision is taken to use one of the overhead devices it should be established that it can be mounted in a position which allows it to serve the anaesthetic machine and yet be clear of the operating lamp under all normal operating conditions.

17. It will be noted that flexible hoses suspended from a movable point are liable to foul sterile trolleys unless carefully watched. Some anaesthetists prefer to use none of these devices but to work with as many wall terminal units as are necessary for every convenient position of the anaesthetic apparatus. The use of pendants and booms increases the risk of cross-infection from dust and hoses, and cables hanging from booms etc. may cause embarrassment to the operating theatre team. Nevertheless the majority of users are in favour of some form of suspended outlet.

18. All devices at high level should provide 1·8m. (5 ft. 10 in.) clearance above floor level. Retractable booms and pendants should provide this clearance in the retracted position.

Permanent hose connections and hoses

19. Permanent connections between the fixed pipe work and the flexible hoses in booms, pendants and similar fittings should be made by means of the terminal units or by approved non-interchangeable couplings designed to prevent cross connection. The hoses must have satisfactory anti-static properties as defined in Hospital Technical Memorandum No. 1—Anti-static Precautions: Rubber, plastics and fabrics—or they may be electrically bonded across.

20. When wall-mounted terminal units are provided in theatres a rail similar to a towel rail should be mounted on the wall about 150mm. (6 in.) above floor level behind which the flexible hoses may be threaded to bring them down to floor level. The bar of the rail should be easily removable.

Fixed pipe lines

21. Pipes used for internal installations, and any installations carried in protective pipes, should be of copper to B.S. 2871: Part 1 Table X.*† Pipes, fittings and valves for oxygen, nitrous oxide, nitrous oxide/oxygen mixtures and compressed air should be degreased. Pipes, fittings and valves for vacuum should

* This B.S. is still under preparation. It will be in metric terms and Table X will replace B.S. 659. TABLE A.

† Stainless steel tubes may be used but installation costs usually make them uneconomical. Plastic tubes increase the fire hazard when used for medical gases and should not be used for the fixed pipework.

also be de-greased if they are to be installed simultaneously with the medical gases/compressed air installations to avoid the risk of the use of greasy pipes on oxygen installations. In order to meet this requirement, pipes up to and including 54mm. (2 in.) internal diameter should be steam cleaned internally, dried, shot blasted, and blown through with medical quality air, and individually capped at both ends after passing a visual internal inspection. Pipes above 54mm. (2 in.) should be similarly cleaned if this can be done economically, or they may be solvent cleaned with an approved agent (such as trichlorethylene) leaving no poisonous residues, then dried and individually capped at both ends after a visual inspection. Bundled pipes should be sealed with an adhesive tape marked "medical gas pipes".

22. Joints should normally be made on site by silver brazing, using British Standard 1845 type AG1 alloy. Brass brazing should not be employed. Where screwed joints are permitted they may be made with unsintered (de-greased) P.T.F.E. tape.

Fittings and valves—general

23. Fittings and valves should be supplied already clean and de-greased and in sealed plastic bags identifying them as medical gas fittings. Fittings should be of the "high-duty" type suitable for steam services gauge pressures up to 17 bar (250 p.s.i.). Flanged joints with approved gaskets may be permitted exceptionally for vacuum valves in sizes of 42mm. (1½in.) and above.

Valves

24. Valves of the lever-operated ball type are to be preferred because a clear indication of the "ON" and "OFF" position is given, but diaphragm or bellows types may be used. If screw-down valves are used they should preferably be of a type which gives a clear indication of the extent to which the valve is open, or at least a clear indication of the direction for closing it. Valves on the distribution system should be of the non-lubricated type and constructed of non-ferrous materials. They should preferably be designed for capillary joint connections to the pipe lines by silver soldering as in paragraph 22. Where screwed connections are provided for pipe line connection they should have I.S.O. metric threads in accordance with B.S. 3643 or pipe threads to B.S. 21 but this does not exclude valves having integral union joints with other threads. Non-ferrous materials should be used for plant room valves for those components which may come into contact with the gases.

25. Valves are required for emergency use by the staff and for engineering maintenance purposes. The following are suggested locations for valves for oxygen, nitrous oxide and compressed air systems. One valve at each point should be adequate for both emergency and engineering maintenance purposes.

(i) Connection of supply plant to pipe lines.
(ii) Exit of pipe line from any building.
(iii) Entry of pipe line to any building.
(iv) On branches, risers, etc., at connection to main pipe line.
(v) On branches serving individual departments and in certain cases parts of departments as stated below.

26. When deciding on the number of valves required for final branches it is necessary to try to strike a balance between providing an excessive number of valves in an effort to minimise maintenance interruptions, and insufficient valves which could lead to difficulties in interrupting the gas supply for maintenance, and in emergencies. The following suggestions are given as guidance but each case should be treated on its merits. It should be borne in mind that the British Standard pipe line terminal unit will incorporate a valve to permit maintenance of the outlet, thus greatly reducing the need for the operation of other valves.

Wards, general	One valve near entrance to ward.
Intensive care, intensive therapy and recovery rooms	One valve at entrance plus valves to control the pipes leading to every four to eight beds: the latter should control not more than half the outlets in any one room.
Operating theatre suite (a suite=one theatre plus its ancillary rooms)	One valve at entrance or at the theatre sister's duty station if this is not far from where the pipe enters the suite.
Other departments	One valve at entry.

27. On compressed air and vacuum installations it will rarely be necessary to provide valves on branches and risers etc. at the connections to main pipe lines and it may be permissible to provide a reduced number of valves controlling the connections to wards.

28. Valves should be readily accessible in an emergency from the area served by the section of pipe work and they should be mounted at a height of 1·22m. (4 ft.) from floor level in positions which are unlikely to be obstructed by other equipment or apparatus. They should be clearly marked to indicate their function; in simple language describing the areas affected by the operation of the valve. It is recommended that each valve outside the central plant area be mounted in a standard box, irrespective of its function. Any valves larger than those for 28mm. O.D. (1 in.) pipe which are not required to be operated in an emergency may be accommodated in readily accessible parts of the duct, or in ventilated cupboards, provided the valves are lockable in the open and the closed positions. Every valve should be fitted with an identity number plate for operational purposes.

Valve boxes

29. Each box should be lockable and each emergency valve box should be fitted with a suitable breakable cover. The box should be provided with vents at the top and bottom and be large enough to allow adequate access for maintenance and for the fitting of the identification label. The keys for the boxes should be non-interchangeable in support of the "Permit-to-Work" system.

V. Gas flow rates and pipe line design procedure

Consumption of oxygen and nitrous oxide

30. Preliminary designs may, in the absence of more reliable information, be based on figures in Appendix 6.

Flow rates required at terminal units

31. The flow rates at terminal units for all P.M.G. and V. installations are stated in terms of flow at standard temperature and pressure (S.T.P.). The rates of flow actually occurring in the pipe lines serving the terminal units will therefore be lower than the stated figures in the case of pressure gases and higher in the case of vacuum, and will depend upon the pipe line operating pressure.

32. The flow rates required at terminal units are given in Table 3.

TABLE 3

Flow rates required at terminal units

Service	*Flow rate, litres/minute at S.T.P.*	*Nominal supply gauge pressure at terminal unit*	
		bar	*p.s.i.*
Oxygen	40	3·9	57
Nitrous oxide	15	3·9	57
Medical gas mixtures (Nitrous oxide/ Oxygen)	20(a)	3·9	57
Medical compressed air in theatres where air-operated surgical tools are used	250(b)	6·9	100
Medical compressed air in other theatres	50	6·9	100
Medical compressed air in dental surgeries	65	3·9	57
Medical compressed air in other areas	50	3·9	57
Medical vacuum	40	minus 400 mmHg	

NOTES

(*a*) Analgesic gas terminal units should be capable of supplying inhalationary gasps at a peak flow rate of 275 litres/minute without causing the available pressure to fall below 3·1 bar (45 p.s.i.).

(*b*) Only a small range of surgical tools is operated at a flow rate exceeding 250 litres/minute, therefore, where it is known that the range of tools to be used will not have a demand exceeding this figure, the central pipe supply system may be designed for a maximum flow rate of 250 litres/minute for each theatre terminal unit. For full details see Appendix 7.

Oxygen flow rates for hyperbaric chambers

33. Clinical chambers, radiotherapy chambers and hyperbaric beds should be supplied by separate pipes from the liquid oxygen supply system. Typical rates of flow for one-person chambers are shown in Table 4.

TABLE 4

Oxygen flow rates for hyperbaric chambers

	Approx time for one complete treatment	*Total consumption for one treatment*		*Additional for each minute*	
		ft³	*litres*	*ft³*	*litres*
Clinical hyperbaric chamber with re-circulation	2 hours	180	5,000	9	250
Clinical hyperbaric chamber without re-circulation	2 hours	360	10,000	14	400
Radiotherapy hyperbaric chamber	1 hour	500	14,000	9	250
Hyperbaric bed	2 hours	150	4,200	9	250
Neo-natal chamber	—	—	—	1	30

NOTE

The figures for a hyperbaric bed relate to a single treatment. If the bed is used for continuous treatment it may be assumed that the rate of flow will not exceed 250 litres/minute.

Flow rates in oxygen, nitrous oxide and medical gas mixture pipe lines

34. The size of the oxygen and nitrous oxide branches to each theatre suite (operating theatre plus anaesthetic room) and the size of risers or distributors to a group of theatre suites may be calculated using the figures in Table 4A.

These figures should also be used for operating theatres in the maternity department and for minor operating theatres, e.g. theatres in the accident and emergency department.

An additional allowance of 20 litres/minute may be made for each plaster room.

TABLE 4A **Flow rates in oxygen and nitrous oxide pipe lines for theatre suites**

Gas	*Carrying capacity of branch to each suite*	*Carrying capacity to be allowed for riser or distributor*		
		For first suite	*Add for second suite*	*Add for each additional suite*
	litres/minute	*litres/minute*	*litres/minute*	*litres/minute*
Oxygen	50	50	30	20
Nitrous oxide	30	30	20	15

NOTE

The mechanical power required for the operation of patient ventilators in operating theatres may be obtained from the piped medical compressed air system, or the ventilators may be electrically operated. The figures for oxygen above should be increased by 40% when the piped oxygen supply is used for this purpose as well as to supply the patient.

35. The size of the branch or riser or distributor to the recovery ward may be calculated on the basis of 20 litres/minute per bed, with diversity allowed as follows:

For the first 8 beds		100%
For 9–12 beds	the first 8 beds	100%
	the remainder	60%
For 13–16 beds	the first 8 beds	100%
	the remainder	50%
For more than 16 beds	the first 8 beds	100%
	the remainder	45%

36. Each oxygen terminal unit in an intensive therapy unit or area should be capable of passing 40 litres/minute if it is intended to use the oxygen to provide the mechanical power for driving them as well as to supply the patient* or 20 litres/minute if the ventilators are electrically driven or driven by the medical compressed air supply. The size of the oxygen riser or distributor in these areas should be based on the simultaneous use of all terminal units. Any nitrous oxide terminal unit in the area should be capable of passing 15 litres/minute.

37. The following flow rates should be allowed for calculating the size of branches for oxygen and nitrous oxide in all other departments and wards.

(i) For a single terminal unit —20 litres/minute for oxygen and 15 litres/minute for nitrous oxide.

(ii) For branches serving more than one terminal unit —20 litres/minute for oxygen and 15 litres/minute for nitrous oxide at the most remote terminal unit, plus 6 litres/minute for each other terminal unit, subject to an allowance for diversity where appropriate. In the absence of evidence to the contrary it may be assumed that not more than one quarter of the terminal units will be in use simultaneously, see example below.

Example for branches for oxygen for *other departments and wards only*. A branch serving 13 oxygen terminal units would be sized to carry

$$20 + (6 \times 12/4) \text{ litres/minute}$$
$$= 38 \text{ litres/minute}$$

38. The sizes of the various parts of the main oxygen risers or distributors for wards only should be based on flows given in Appendix 8. Where the risers or distributors supply departments as well as wards the sizes should be based on the ward flows given in Appendix 8 plus the flows for the departments calculated as in paragraphs 34 to 37 above. A typical schematic layout for an installation is given in Appendix 9 and the corresponding design flows in the various sections of this system are calculated in Appendix 10. The figures at the lower end of the graph in Appendix 8 may be subject to an increase in the light of further information in respect of hospitals having heavy oxygen usage in wards, e.g. respiratory units. They may also be subject to reduction in respect of hospitals having light oxygen usage in wards, e.g. psychiatric units.

39. The sizes of the various parts of the main nitrous oxide risers or distributors should be calculated by simple addition of the individual departmental flows calculated as in paragraphs 34, 36 and 37, with no further allowance for diversity between them.

40. Pipe line sizes for nitrous oxide/oxygen mixtures should be based on the assumption that 50% of the terminal units are in simultaneous use, each passing 20 litres/minute. In addition provision should be made for 6% of the remaining terminal units (minimum 1) to be passing simultaneous inhalationary gasps at a peak flow rate of 275 litres/minute. Under these conditions the available gauge pressure from the terminal units should not fall below 3·1 bar (45 p.s.i.). *The demand regulator in the face mask may not operate if the pressure falls below this level.*

* *This figure is adequate for most oxygen-driven ventilators but some need more than this. In some cases where high oxygen rates are required a greater pressure drop can be tolerated. The actual flow rate required and pressure tolerance should be checked in advance where possible. (It is usually more economical to provide a piped medical compressed air supply than to use the oxygen for driving ventilators.)*

Flow rates for compressed air pipe lines and compressors

41. Compressed air pipe line sizes and compressor sizes should be based upon the following design flow, expressed in terms of air at S.T.P. as given below: Each compressed air terminal unit in every theatre suite should be capable of passing 250 litres/minute. The branch to each theatre suite should be capable of carrying 300 litres/minute. The size of the risers or distributors may be calculated, based on the diversity of use as follows:

Theatres

For up to 8 theatres:	
First	300 litres/minute
Remainder	50 litres/minute per theatre
For 9 to 16 theatres:	
First two	600 litres/minute
Remainder	30 litres/minute per theatre
For over 16 theatres:	
First three	900 litres/minute
Remainder	20 litres/minute per theatre

Recovery wards

For up to 8 beds:	50 litres/minute per bed
For 9 to 12 beds:	
First eight	50 litres/minute per bed
Remainder	30 litres/minute per bed
For more than 12 beds:	
First eight	50 litres/minute per bed
Remainder	25 litres/minute per bed

Intensive therapy unit or area

First four beds	50 litres/minute per bed
Remainder	25 litres/minute per bed

Dental surgeries

For up to five chairs:	65 litres/minute per chair
For 6 to 10 chairs:	
First five	65 litres/minute per chair
Remainder	26 litres/minute per chair
For 11 to 30 chairs:	
First five	65 litres/minute per chair
Remainder	20 litres/minute per chair
For 31 to 80 chairs:	
First five	65 litres/minute per chair
Remainder	16 litres/minute per chair
For more than 80 chairs:	
First five	65 litres/minute per chair
Remainder	13 litres/minute per chair

Other terminal units

First eight other terminal units	50 litres/minute per terminal unit
Remainder	10 litres/minute per terminal unit

42. Compressed air installations are likely to be required mainly for theatre work, for patient ventilators in intensive therapy units and recovery wards and for work in the dental outpatients department. Other possible uses are:

(i) Administration of drugs by nebulization.

(ii) Aspirators for continuous suction drainage (low suction).

(iii) Blood pressure cuff inflation, when frequent monitoring is necessary.

Typical maximum flow rates for various types of compressed air equipment are given in Appendix 7. The compressor capacity should be based on figures indicated in paragraph 41, plus the capacity required for operating the dryer as in paragraph 150.

NOTE

Medical compressed air installations serving theatres, dental surgeries and wards, etc. should *not* be used for general mechanical services, such as operating air conditioning controls or for the mechanical operation of the movement of the dental chair.

Flow rates for vacuum pipe lines and pumps

43. The relevant paragraphs on vacuum pumps in this document are based on the final draft of the British Standard for medical vacuum pipe line services which is currently being prepared. The design of the system should be such as will maintain a vacuum of not less than 400 mmHg (0·533 bar) below a standard atmospheric pressure of 760 mmHg (1·013 bar).

44. Vacuum pipe line sizes and pump capacity should be calculated on the basis of the design flow, expressed in terms of free air as follows:

Each operating theatre	80 litres/minute of free air.
Each anaesthetic room	40 litres/minute of free air.
Recovery wards	40 litres/minute of free air per bed.
Intensive therapy unit or area	20 litres/minute of free air per bed.
General wards, including normal proportion of heavy nursing (high dependency group) and other intermediate and self-care areas*	See Appendix 11.

Other areas or wards (e.g. geriatric). As advised by the Medical Officer.

45. In the absence of any clear indication to the contrary it may be assumed that no important economy is likely to arise from the application of diversity when calculating pipe sizes for vacuum distributors to operating departments having up to 8 theatres although it is recognised that in normal practice diversity between timing of the maximum demands in theatres may occur.

46. For operating departments having more than eight theatres a diversity factor may be applied to the design flow for the vacuum distributor to the theatre, anaesthetic room (and recovery ward beds) as follows.†

* For definitions. See Appendix VII of Hospital Building Note No. 4 (revised 1968)—Ward Units.

† Further research is in progress into the possibility of allowing a greater diversity factor for operating theatres.

Theatres, anaesthetic rooms and recovery ward beds

8–12	The first eight 100%, the remainder 60%
13–16	The first eight 100%, the remainder 50%.
More than 16	The first eight 100%, the remainder 45%.

The flow rate for the recovery room should be allowed for separately if the recovery room is not supplied from the theatre distributor and in that case the same diversity factors should be used.

47. The following procedure should be adopted for calculating the vacuum flow from ward areas;

(i) The vacuum flow from each individual ward should *not* be calculated by reference to Appendix 11 but by consideration of the ward function. Thus high dependency wards or areas accommodating the heavy nursing group of patients will require a greater design flow than wards or areas accommodating intermediate care and self-care patients.

(ii) The design for high dependency areas should be based on 12 litres/minute/per bed with a minimum of 40 litres/minute for any particular pipe line. The design for intermediate care and self-care areas should be calculated on the following basis:

Wards or areas of 1–6 beds—
40 litres/minute (total).

Wards or areas of 7–15 beds—
40 litres/minute for the first 6 beds plus 3·5 litres/minute for each additional bed.

Wards or areas over 16 beds—
40 litres/minute for the first 6 beds plus 2·5 litres/minute for each additional bed.

(iii) A diversity factor may be applied when estimating the design flow for groups of single-bed rooms each having a terminal unit and any such factor should be based on medical advice.

48. In the absence of evidence to the contrary, it may be assumed that not more than 25% of the vacuum terminal units in other departments will be in use simultaneously and those so in use will require a maximum flow rate of 20 litres/minute of free air.

49. The design flow for main risers or distributors should be based on Appendix 11, with additional allowances to cover the areas as in paragraphs 44 and 46 and the allowances for these few terminal units in other departments as in paragraph 48. A typical schematic arrangement for the main risers and distributors is shown in Appendix 9 and the corresponding design flows in the various sections is given in Appendix 12.

50. It must be clearly understood that there is a difference between the volume of free air aspired at the terminal units and the volume of that same quantity of air handled by the pumps. This is dealt with more fully in the section on vacuum pumps. It may, however, be noted that 100 litres of free air corresponds to 200 litres of air at a vacuum of 400 mmHg below atmospheric pressure and approximately 300 litres at a vacuum of 500 mmHg below atmospheric pressure.* The volume of rarified air flowing in the pipe line is consequently two to three times the volume of the total design flow which is specified in terms of free air. The pipe sizing table referred to in paragraph 55 (i.e. Table 7) is given in terms of the free air aspired at the terminal units.

Pressure drop in pipe line

51. The limits to pressure drops on the distribution system given below are based on experience with good current practice. They are:

(i) Medical gas and medical compressed air pipe line installations should be designed for 5% pressure drop from the storage or production point to the point of delivery, to the back of the most remote terminal unit. This is equivalent to 0·2 bar (3 p.s.i.) drop for oxygen and 0·3 bar (5 p.s.i.) drop for compressed air at a gauge pressure of 6·9 bar (100 p.s.i.), and 0·2 bar (3 p.s.i.) at a gauge pressure of 4·1 bar (60 p.s.i.).

(ii) A total pressure drop of 25% is permissible on medical gas mixture systems in the special circumstances indicated in paragraph 40. This allowance includes the pressure drop across the terminal unit and probe.

(iii) A total pressure drop of 7½% is permissible for compressed air in theatres when the system is supplying a terminal unit at the rate of 250 litres/minute. This includes the pressure loss across the terminal unit and probe.

(iv) Vacuum pipe lines are usually designed for pressure drops of approximately 10% or 50 mmHg, from the plant room wall to the back of the terminal unit.

(v) The pressure drops which are permitted across the terminal unit assemblies are indicated in Table 1. (See paragraph 11).

52. When planning pipe routes it is particularly important to consider the problems which may arise from the change in function of a department or area and also to allow for reasonable changes in medical and surgical requirements. P.M.G. and V. installations should, for these reasons, be made as accessible as possible so that changes or extensions can be made with a minimum of disturbance. Examples of possible changes are indicated in footnotes (a), (b) and (c) to the

* PV=K, where P is absolute pressure and V is volume.
If P_0=760 mmHg, P_1=360 mmHg, P_2=260 mmHg and V_0=100 litres
then $P_0V_0=K=P_1V_1=P_2V_2$

Therefore $V1=\frac{760}{360}\times 100=211$ litres (say 200 litres)

and $V2=\frac{760}{260}\times 100=292$ litres (say 300 litres)

scales of terminal units given in Appendix 3. Accessibility for such extensions will also make it easier to deal with any future pipe fractures or leaks.

53. Appropriate allowance should be made for possible future loads, for example when a new building is only partially served by the current design or where a neighbouring block is not initially served. It may sometimes be wise to allow for the possibility of a load arising from future buildings on vacant land traversed by the supply mains; provision of this kind should be in the form of valves blanked off. Future expansion may otherwise involve considerable expense and disruption of the service.

Pipe sizing practice

54. The theoretical pipe sizes for some sections of an average hospital installation may be quite small. In practice it is sometimes difficult to instal pipes of the smaller sizes and guarantee that they are free from internal obstruction at soldered fittings. The carrying capacity of these small pipes will be seriously affected either by the presence of burrs or solder, or by relatively minor damage during or after installation. Such pipework is also low in mechanical strength. Pipes of 6mm. ($\frac{1}{4}$ in.) nominal bore have hitherto been used quite extensively for risers or drops to individual terminal units (the metric equivalent of this size may be either 8mm. or 10mm. outside diameter).

55. Tables 5, 6 and 7 show the calculated pressure loss for various lengths of straight copper pipe to the new B.S. 2871: Part I, Table X. The figures are for straight lengths with no fittings or valves. Corresponding figures for existing installations, or for use with the remaining stocks of pipes conforming to B.S. 659, Table A, may be calculated by interpolation, noting the comparative mean bores as given in Table 8.

TABLE 5

Medical gases pipe line sizing—using new British Standard for copper pipes

Old B.S. 659 size	*New British Standard size (B.S. 2871: Part I, Table X)*				*Distance from source at 60 P.S.I.G. for 1, 2 and 3 p.s.i. (0·07, 0·14 and 0·21 bar) pressure loss*																
					feet 25	50	100	200	300	400	500	600	700	800	900	1000	1100	1200	1300	1400	1500
Nominal bore inches	*Outside diameter mm.*	*Wall thickness mm.*	*Mean internal diameter*		*metres* 8	15	30	61	91	122	152	183	213	244	274	305	335	366	396	427	457
			mm.	*inches*	*Free air flow rate, litres per minute*																
$\frac{1}{4}$	8	0·6	6·8	0·2667	*Unsuitable for use on any P.M.G. and V. installation*																
$\frac{1}{4}$	10	0·6	8·8	0·3465	178 261 325	*Suitable for short risers or drops to terminal units for gases only (See table 6 for air and table 7 for vacuum)*															
$\frac{3}{8}$	12	0·6	10·8	0·4252	311 455 564	209 307 382	141 207 258	95 139 174	75 110 138	64 94 117	56 82 103	50 74 93	46 68 85	43 63 78	40 59 73	37 55 69	35 52 65	34 50 62	32 47 59	31 45 57	30 44 55
$\frac{1}{2}$	15	0·7	13·6	0·5354	579 845 1038	391 572 711	263 386 481	177 260 325	140 207 258	119 175 219	105 154 192	94 139 173	86 127 159	80 118 147	75 110 137	70 104 129	66 98 122	63 93 117	60 89 111	58 85 107	56 82 102
$\frac{3}{4}$	22	0·9	20·2	0·7953	1677 2441 3023	1135 1656 2053	768 1123 1395	518 759 945	411 604 751	349 513 638	307 451 562	277 407 507	254 373 465	235 345 431	220 323 403	207 304 379	196 288 359	186 274 342	178 262 326	170 251 313	164 241 301
1	28	1·2	26·2	1·0315	3363 4881 6034	2283 3320 4109	1547 2257 2800	1047 1530 1901	832 1218 1514	706 1035 1287	622 912 1135	560 823 1024	514 754 938	476 699 870	445 653 814	419 615 767	397 583 726	378 555 691	361 530 660	346 508 633	332 488 609
$1\frac{1}{4}$	35	1·2	32·6	1·2835	6023 8720 10758	4096 5943 7344	2783 4051 5018	1886 2752 3415	1500 2192 2723	1275 1865 2317	1124 1644 2044	1013 1483 1845	928 1360 1692	861 1261 1569	805 1180 1468	758 1111 1383	718 1053 1310	683 1002 1248	653 957 1192	626 918 1143	602 883 1099
$1\frac{1}{2}$	42	1·2	39·6	1·5591	10103 14587 17963	6883 9963 12290	4685 6806 8421	3180 4633 5743	2533 3694 4584	2154 3145 3904	1899 2775 3446	1713 2504 3112	1570 2296 2855	1456 2130 2648	1362 1993 2478	1283 1878 2335	1215 1780 2213	1157 1694 2107	1105 1619 2014	1060 1553 1932	1019 1493 1858

EXAMPLES

1. 122m. (400 ft.) of 28mm. pipe would carry 706 litres of medical gas per minute with a pressure loss of 0·07 bar (1 p.s.i.), or 1035 litres/minute with a loss of 0·14 bar (2 p.s.i.).

2. A flow of 1100 litres/minute in 122m. (400 ft.) of 28mm. pipe would result in a pressure loss of approx. 0·15 bar (2·2 p.s.i.).

3. 140m. (459 ft.) of 28mm. pipe would carry 1000 litres/minute with a pressure loss of approx. 0·15 bar (2·2 p.s.i.)

TABLE 6

Medical compressed air pipe line sizing—using new British Standard for copper pipes

Old B.S. 659 size	New British Standard size (B.S. 2871: Part I, Table X)				Distance from source at 105 p.s.i.g. for 1, 2 and 5 p.s.i. (approx. 0·07, 0·14 and 0·34 bar) pressure loss																
					feet 25	50	100	200	300	400	500	600	700	800	900	1000	1100	1200	1300	1400	1500
Nominal bore inches	Outside diameter mm.	Wall thickness mm.	Mean internal diameter mm.	Mean internal diameter inches	metres 8	15	30	61	91	122	152	183	213	244	274	305	335	366	396	427	457
					Free air flow rate, litres per minute																
¼	8	0·6	6·8	0·2667	Unsuitable for use on any P.M.G. and V. installation																
¼	10	0·6	8·8	0·3465	235 345 565	Suitable for short risers or drops to terminal units only, but not in operating theatres, where 15mm. risers and drops should be used															
⅜	12	0·6	10·8	0·4252	408 599 979	276 405 664	186 274 450	125 185 304	99 147 242	84 124 205	74 109 181	67 99 163	61 90 149	56 84 138	53 78 129	50 74 122	47 70 115	45 66 110	43 63 105	41 61 100	39 58 96
½	15	0·7	13·6	0·5354	759 1112 1811	514 754 1231	347 510 836	234 345 566	186 274 450	158 232 383	139 205 337	125 184 304	114 169 279	106 156 258	99 146 242	93 138 227	88 130 215	84 124 205	80 118 196	77 114 188	74 109 180
¾	22	0·9	20·2	0·7953	2192 3198 5180	1488 2175 3533	1009 1478 2410	682 1001 1638	542 797 1306	460 677 1111	406 597 980	366 538 884	335 493 811	310 457 752	290 428 704	273 403 663	259 381 628	246 363 598	235 347 571	225 332 548	217 320 527
1	28	1·2	26·2	1·0315	4387 6382 10290	2984 4351 7038	2027 2963 4816	1374 2013 3283	1093 1604 2620	929 1364 2232	819 1203 1970	739 1086 1779	677 995 1632	628 923 1514	587 863 1417	553 813 1335	524 771 1266	498 734 1205	476 701 1152	456 672 1105	439 646 1063
1¼	35	1·2	32·6	1·2835	7841 11380 18271	5345 7775 12528	3638 5307 8599	2470 3612 5876	1968 2881 4696	1674 2453 4003	1476 2165 3536	1332 1954 3194	1221 1792 2931	1132 1662 2720	1059 1556 2547	998 1466 2401	945 1389 2276	900 1323 2168	860 1264 2073	825 1212 1988	793 1166 1912
1½	42	1·2	39·6	1·5591	13128 19010 30392	8964 13012 20892	6113 8901 14381	4159 6070 9849	3316 4847 7881	2823 4129 6723	2490 3646 5942	2248 3293 5371	2061 3021 4930	1912 2803 4577	1789 2624 4286	1686 2473 4042	1598 2344 3833	1521 2232 3651	1454 2134 3491	1394 2047 3349	1341 1969 3223

EXAMPLES

1. 122m. (400 ft.) of 28mm. pipe would carry 929 litres of free air per minute with a pressure loss of 0·07 bar (1 p.s.i.) or 2232 litres/minute with a loss of 0·34 bar (5 p.s.i.).
2. A flow of 1500 litres/minute in 122m. (400 ft.) of 28mm. pipe would result in a pressure loss of approx. 0·16 bar (2·3 p.s.i.).
3. 140m. (459 ft.) of 28mm. pipe would carry 1000 litres/minute with a pressure loss of approx. 0·09 bar (1·3 p.s.i.)

TABLE 7

Medical vacuum pipe line sizing—using new British Standard for copper pipes

Old B.S. 659 size	New British Standard size (B.S. 2871: Part I, Table X)				Distance from source at 450 mmHg (gauge) for 10, 20, 30 and 50 mmHg pressure loss																
					feet 25	50	100	200	300	400	500	600	700	800	900	1000	1100	1200	1300	1400	1500
Nominal bore inches	Outside diameter mm.	Wall thickness mm.	Mean internal diameter mm.	Mean internal diameter inches	metres 8	15	30	61	91	122	152	183	213	244	274	305	335	366	396	427	457
					Free air flow rate, litres per minute																
⅜	12	0·6	10·8	0·4252	— 47 60 82	— — 40 55	— — — —	— — — —	— — — —	— — — —	— — — —	— — — —	— — — —	— — — —	— — — —	— — — —	— — — —	— — — —	— — — —	— — — —	— — — —
½	15	0·7	13·6	0·5354	59 89 113 153	— 59 76 103	— 40 51 69	— — — 46	— — — —	— — — —	— — — —	— — — —	— — — —	— — — —	— — — —	— — — —	— — — —	— — — —	— — — —	— — — —	— — — —
¾	22	0·9	20·2	0·7953	173 260 330 445	116 174 222 301	78 117 149 203	52 79 100 137	41 62 79 108	— 53 67 92	— 46 59 81	— 42 53 73	— — 49 67	— — 45 62	— — 42 57	— — 40 54	— — — 51	— — — 49	— — — 46	— — — 45	— — — 43
1	28	1·2	26·2	1·0315	350 525 666 900	236 353 448 607	159 238 303 412	106 160 204 278	84 127 161 220	71 107 137 187	63 94 120 164	56 85 108 148	51 78 99 135	48 72 92 125	44 67 86 117	42 63 81 110	40 60 76 104	— 57 73 99	— 54 69 95	— 52 66 91	— 50 64 87
1¼	35	1·2	32·6	1·2835	637 947 1198 1614	427 638 808 1091	288 431 548 743	193 290 369 503	153 230 293 399	130 195 248 339	114 171 218 298	102 154 197 269	94 141 180 246	87 131 167 228	81 122 156 213	76 115 147 200	72 109 139 190	69 103 132 180	65 99 126 172	63 95 121 165	60 91 116 158
1½	42	1·2	39·6	1·5591	1074 1598 2016 2706	724 1079 1363 1833	488 731 926 1254	328 493 626 851	260 391 497 677	220 331 422 574	194 291 371 506	174 262 334 456	160 240 306 417	148 222 283 387	138 208 265 361	130 196 249 340	123 185 236 322	117 176 224 306	111 168 214 293	107 161 205 280	103 155 197 270
2	54	1·2	51·6	2·0315	2191 3246 4083 5448	1480 2196 2766 3699	1001 1493 1889 2549	674 1010 1281 1737	535 802 1019 1384	453 681 865 1176	399 599 762 1037	359 540 687 935	329 494 629 856	304 458 582 794	284 428 545 742	268 403 513 699	253 381 485 662	241 363 462 630	230 346 441 601	220 332 423 576	212 319 406 554
3	76·1	1·5	73·1	2·8780	5521 8070 10041 13166	3773 5563 6968 9233	2563 3807 4801 6439	1733 2586 3274 4421	1377 2058 2609 3533	1169 1749 2219 3009	1029 1541 1957 2655	927 1389 1765 2396	849 1273 1617 2197	786 1179 1499 2037	735 1103 1402 1906	692 1038 1320 1796	655 983 1250 1701	623 936 1190 1619	595 894 1137 1547	570 857 1090 1483	548 823 1048 1426

EXAMPLES

1. 122m. (400 ft.) of 28mm. pipe would carry 71 litres of free air per minute with a pressure loss of 10 mmHg, or 187 litres/minute with a loss of 50 mmHg.
2. A flow of 160 litres/minute in 122m. (400 ft.) of 28mm. pipe would result in a pressure loss of approx. 36 mmHg.
3. 140m. (459 ft.) of 28mm. pipe would carry 120 litres/minute with a pressure loss of approx. 28 mmHg.

TABLE 8

Comparison between old and new British Standards for certain size of copper pipes

EXISTING B.S. 659— TABLE A		*DRAFT B.S. 2871: PART 1, TABLE X*	
Nominal bore inches	*Mean bore inches*	*Outside diameter mm.*	*Mean bore inches*
¼	0·2965	8	0·2667
—	—	10	0·3465
⅜	0·4175	12	0·4252
½	0·5385	15	0·5354
¾	0·7765	22	0·7953
1	1·0385	28	1·0315
1¼	1·2725	35	1·2835
1½	1·5525	42	1·5591
2	2·0305	54	2·0315
3	3·032	76·1	2·8780

56. It should be noted that this new British Standard refers to pipes by their outside diameter and neither by their nominal bore nor their mean bore. The wall thickness is given in the Standard.

57. Typical losses for corresponding "high duty" brazed fittings and valves may be allowed for by substituting straight lengths of pipe as shown in Table 9. The figures are based on various authorities as well as makers' technical literature. Figures in respect of valves refer to them in the fully open position.

58. Reference to Tables 5 and 6 will show that 8mm. and 10mm. pipes have very limited carrying capacity and 8mm. pipes should not be used for P.M.G. and V. Pipes of 10mm. outside diameter will be suitable for use on medical gas installations for connections to individual terminal units by short risers or drops. Pipes of this size will also be suitable for compressed air supplies to terminal units in wards etc., but will not be large enough for compressed air supplies in operating theatres where each terminal unit should be supplied by a 15mm. pipe.

59. No pipe smaller than 12mm. outside diameter should be used for the connection to terminal units on vacuum installations. Great care must be taken in the design of vacuum pipe line installations to achieve the most economical design.

60. Considerable economy may be possible by restricting the range of pipe sizes incorporated in any given design to a limited number of "preferred sizes" and it will usually be helpful to ascertain the preferred size range of the principal contractors engaged in this field, before detailed designs are prepared.

Spare pipe line

61. When complete new installations for P.M.G. and V. are being planned for new hospitals it may be prudent in some cases to provide a spare pipe line. This should extend from the manifold room to each theatre, anaesthetic room, recovery room, maternity delivery room and eclamptic room. The pipe should be terminated at a position in the plant room convenient for the installation of a manifold in the future. At this position and at the various terminal points it should be capped, or terminated in a British Standard terminal unit box. (It is possible that this pipe may be used to introduce a mixture of 50% nitrous oxide and 50% oxygen.)* The pipe line should be constructed and tested as for oxygen supply but should normally be colour-identified as a spare medical gas pipe line.

TABLE 9

Approximate equivalent lengths of copper pipes for fittings

Item	*Length of equivalent pipe feet (metres)*								
	Nominal bore of pipe (B.S. 659, Table A)								
	¼in	⅜in	½in	¾in	1in	1¼in	1½in	2in	3in
	Outside diameter of pipe (B.S. 2871: Part 1 Table X) (mm)								
	10	12	15	22	28	35	42	54	76·1
Gate or ball valves	1 (0·3)	1 (0·3)	1 (0·3)	2 (0·6)	3 (0·9)	3 (0·9)	3·5 (1·1)	4 (1·2)	4 (1·2)
Globe or diaphragm valves	14 (4)	14 (4)	19 (6)	28 (9)	30 (9)	42 (13)	45 (14)	58 (19)	70 (21)
Angle valves	8 (2·5)	8 (2·5)	10 (3·1)	12 (4)	15 (5)	20 (6)	23 (7)	29 (9)	47 (14)
Tee (Through)	0·5 (0·2)	0·7 (0·2)	1 (0·3)	2 (0·6)	2 (0·6)	2 (0·6)	3 (0·9)	4 (1·2)	5 (1·6)
Tee (Branch)	3 (0·9)	3 (0·9)	3·3 (1·0)	6 (1·9)	6 (1·9)	7 (2·2)	9 (2·8)	11 (3·5)	14 (4)
90° Elbow	1·4 (0·4)	1·4 (0·4)	1·7 (0·5)	2·1 (0·7)	3·0 (0·9)	3·5 (1·1)	4 (1·2)	4·5 (1·4)	5 (1·6)

* See Appendix 3 for requirements in maternity department.

VI. Installation procedure

Accommodation of pipes

62. The general rule is to keep medical gas pipe lines away from areas where they may be subject to any of the following:

Mechanical damage
Chemical damage
Excessive heat
Splashing, dripping or permanent contact with oil, grease or bituminous compounds
Electrical sparks.

63. Service ducts or voids containing medical gas pipe lines should have adequate ventilation to prevent gas concentrations in the event of any leakage occurring.

64. Exposed pipe lines should not normally be installed in lift shafts, kitchens, laundries, boiler houses, generator rooms, incinerator rooms, storage rooms designed to house combustible materials or in any other fire risk area. Where pipe lines in such locations are unavoidable they should be concealed in non-combustible materials that will prevent the possibility of the liberation of gases into the room in the event of pipe line failure.

65. Pipe lines should be suitably protected where there is a possibility of physical damage, e.g. from the passage of trolleys. Clearance of 150mm. (6 in.) should be maintained between the fixed pipe lines and all other services: a minimum clearance of 6mm. ($\frac{1}{4}$ in.) should be preserved where services cross.

66. Buried pipe lines should be run in a trench not less than 450mm. × 450mm. (18 in. × 18 in.) with the P.M.G. and V. pipe protected throughout its length by a continuous glazed earthenware pipe, or carried in properly drained ducts with removable covers. These glazed pipes or ducts should be further protected where the pipe crosses areas used by wheeled traffic; in such areas the glazed pipes and ducts should be encased in concrete. Multi-way ducts should be used where more than one pipe is to be carried.

67. Care is required when selecting pipe line routes to prevent the pipes coming into contact with electric cables and wiring and to minimise the risk of electric shock in the event of a fault on adjacent cables. This is dealt with in detail in Section XII.

68. Although it is not essential to de-grease vacuum installations these are frequently installed by the contractor simultaneously with the de-greased oxygen and nitrous oxide pipe lines. Carelessness in the separation of piping and fittings for these installations may result in contamination of or damage to the oxygen or nitrous oxide system. In such circumstances the use of de-greased pipe and fittings for the vacuum installation is recommended.

Pipe work supports

69. The pipe line should be adequately supported at sufficient intervals in accordance with Table 10 to prevent sagging or distortion. Supports for surface mounted pipework should provide clearance to permit painting of the surface. Where it is essential for pipes to cross electric cables or conduit they should be supported on both sides of the crossing and prevented from touching the cables or conduit. Supports should be of suitable material or suitably treated to minimise corrosion and prevent electrolytic action between pipes and supports.

TABLE 10

Intervals between copper pipe supports

Nominal pipe bore. Inches	*Proposed metric sizes. Outside diameter mm.*	*Maximum intervals for vertical runs*		*Maximum intervals for horizontal runs*	
		Feet	*Metres*	*Feet*	*Metres*
$\frac{1}{4}$	8* 10*	4	1·2	—	—
$\frac{3}{8}$	12	4	1·2	3	1
$\frac{1}{2}$	15	6	1·8	4	1·2
$\frac{3}{4}$	22	8	2·4	6	1·8
1	28	8	2·4	6	1·8
$1\frac{1}{4}$	35	10	3·0	8	2·4
$1\frac{1}{2}$	42	10	3·0	8	2·4
2	54	10	3·0	9	2·7
3	76	12	3·6	10	3·0

* Both metric sizes may be considered as the alternative to the Imperial $\frac{1}{4}$ in. pipe, but the 8mm. pipe should not be used for P.M.G. and V. and the 10 mm. pipe will only be suitable for certain short risers or drops. See also paragraphs 58 and 59.

70. With the degree of vacuum recommended in the new British Standard, any fluid inadvertently drawn into the pipe work is rapidly evaporated. For this reason it is not necessary to provide traps on the distribution system nor is it necessary to slope the pipe work. No sloping is required for drainage purposes on any of the pipe work required for medical gases or compressed air of the dryness specified in this document.

71. A full-way drain cock should be provided at the bottom of each main vertical run on the compressed air and vacuum systems. Such drain cocks should be of the same high quality as the other valves on the distribution system and should be sited carefully so that no damage is likely to occur to them. Drain cocks will only rarely be used and may normally be locked in the closed position.

72. No joints in pipe work, other than the silver brazed capillary joint to a terminal unit tail pipe, or a connection to a valve in a box, should be buried within the thickness of walls, partitions or floors. Where this is unavoidable the pipe should be carried in a copper sleeve. Where pipe work has to be buried in a partition, it is advantageous to use terminal units and boxed valves with tail pipes which extend into the ceiling void or duct, rather than make buried joints to the conventional short tail pipes.

73. Pipe lines need further protection in certain circumstances, as follows:

(i) Where pipes pass through walls, partitions or floors they should be fitted with sleeves of copper pipets B.S. 2871 and provided with appropriate wall or ceiling plates.

(ii) Corrosion of pipes can occur where they are in contact with timber treated with fire-resistant or flame-retardant compounds e.g. some timber used for roof trusses and floor joists. This contact should be avoided by the use of impermeable non-metallic materials in the area where contact may occur. P.V.C. spacers or adhesive P.V.C. tape may be used for this purpose. If spacers are used they should not be liable to drop out due to shrinkage or subsequent movement of the pipe or timber. Such precautions are not required where untreated timber is used or where the treated timber is effectively sealed with paint or varnish before the pipes are fixed to it.

74. Valves for oxygen, nitrous oxide and medical gas mixtures should be carefully located, and positioned so that any leakage from the valves cannot result in a build-up of gas in an unventilated space e.g. ceiling void, unventilated roof space. Valves should not be inserted in the middle of main distribution runs but in the branches at points as close as is practicable to the main run. A main shut-off valve should, however, be inserted in a readily accessible position at the bottom of each rising main on the distribution system.

75. Valve boxes should, as far as is practicable, be located so that the covers are flush with the surface of the building structure.

Gauges on the distribution systems

76. Gauges are not usually required outside the plant room on P.M.G. systems. In very extensive systems, as for example systems serving several buildings or tower blocks, it may be desirable to provide a small number of vacuum gauges on the distribution system. These should be located near control valves and it is wise to enclose them in cupboards for safety. Gauges are sometimes marked with a signal blue band in the working range.

Identification of pipe lines

77. Pipe lines should be identified in accordance with B.S. 1710 and it may be convenient to use colour banding for the pipe lines outside of the plant room. Where colour bands are used the identification should be applied near to valves, junctions, walls etc. Each gas should be identified in 6mm. ($\frac{1}{4}$ in.) letters. Self-adhesive plastic labels of approved manufacture may be used for this purpose. All colour coded tapes applied by the pipe manufacturers should be removed before the systems are identified in accordance with this paragraph. The method of identification is indicated in Appendix 4. Care should be taken to maintain pipe line identification when periodical re-painting is undertaken.

VII. Gas cylinder manifold installations

General design

78. Oxygen can usually be supplied economically by cylinders connected to a central manifold installation. Consideration should be given to liquid supplies if the weekly consumption exceeds about 100m.^{3} (3,000 cubic ft.). Nitrous oxide will usually be supplied from a manifold. Compressed air may in some cases be supplied from a manifold or, as is more usual, by means of compressors, often with a manifold supply for emergency standby purposes. A schematic layout for a typical installation is given in Appendix 13. Total storage is usually provided on the basis of one week's supply; each bank of the manifold should hold not less than two days' supply and a supply for three days should be held in cylinders in the store. Greater storage may sometimes be necessary in areas remote from suppliers depots.

79. The nominal and usable capacity of the cylinders commonly used on manifolds are given in Table 11 (the figures are, of course, the equivalents at standard temperature and pressure).

TABLE 11

Medical gas cylinders commonly used on manifolds

Gas	*Nominal capacity*		*Usable capacity*	
	Imperial	*metric*	*Imperial*	*metric*
Oxygen	240 ft³	6820 litres	230 ft³	6450 litres
Nitrous oxide	2000 gals / 320 ft³	9070 litres	310 ft³	8900 litres
Nitrous oxide/oxygen mixture (50/50)	180 ft³	5000 litres	170 ft³	4740 litres
Air	220 ft³	6420 litres	200 ft³	5740 litres

The usable figure for air is that when the cylinders are discharged down to a gauge pressure of 10 bar (150 p.s.i.); the other usable figures are for discharges down to a gauge pressure of 6·9 bar (100 p.s.i.).

80. Oxygen and nitrous oxide manifolds should connect equal banks of gas cylinders to provide equal "duty" and "reserve" storage capacity. The normal requirement in hospitals is for manifolds which have automatic change-over from "duty" to "reserve" banks of cylinders. In certain cases, however, where only a low consumption of gas is expected, e.g. an isolated dental chair, a manifold with manual change-over may be appropriate. All automatic manifolds should be capable of passing 300 litres/minute and manual manifolds 150 litres/minute whilst maintaining the pressure limits given in paragraph 82. The temperature of the gas may fall as low as —30°C (—22°F) as the gas passes through the regulator at maximum capacity and the equipment should be designed accordingly. It is advisable to obtain manifolds from manufacturers familiar with proper practices for their construction and use.

81. An automatic manifold change-over from "duty" to "reserve" should occur at a cylinder pressure which will ensure the greatest possible utilisation of the contents of the cylinders in the "duty" bank. A nominal change-over at a gauge pressure of 6·9 bar (100 p.s.i.) is usually satisfactory for a gas distribution gauge pressure of 4·1 bar (60 p.s.i.). If the normal operation of the change-over control depends on an electricity supply the design should be such that failure of electricity supply does not disrupt the flow of gas to the distribution system.

82. Pressure regulating valves should be capable of maintaining the indicated delivery pressure within ±0·14 bar (2 p.s.i.) of the valve setting, up to the maximum flow rate of the system, providing the gas cylinder pressure is above change-over pressure. There should be separate pressure regulating valves for each cylinder bank and the control system should be designed so that the cylinders of one bank can be changed or the pressure regulator for one bank can be overhauled without loss of continuity of the gas supply. A non-return valve should be inserted between each cylinder tail pipe and the manifold to minimise loss due to leakage.

83. Means should be provided so that an emergency supply of gas is available in the event of manifold failure. This will also permit the coupling of a gas cylinder, via a pressure regulator and excess pressure relief device, to act as a temporary source of supply while the manifold is isolated for repair or maintenance. This arrangement is desirable even with manifolds of a type which permits manual by-passing. A similar arrangement may be necessary to ensure the continuity of supply in large vital areas in very large hospitals such as the intensive care area and the theatre suites. A British Standard terminal unit may be used for this purpose or an existing normal type of terminal unit may be employed, provided that it is connected to the system via an isolating valve, to minimise the risk of leakage from the system at this connection. If a terminal unit is used it should be of the type capable of passing 275 litres at a nominal gauge pressure of 4·1 bar (57 p.s.i.) with a pressure loss not exceeding 0·55 bar (8 p.s.i.).

84. The delivery pipe line from the manifold should be fitted with a self-closing pressure relief valve of a type which can be locked or sealed and set to lift at a pressure of 25% above the designed distribution pressure. The valve should be of brass or bronze and designed and de-greased for oxygen service and should be installed immediately upstream of the emergency supply panel. It should have a flow capacity at least equal to that of the pressure regulator immediately upstream of it. The discharge pipe should be at least one size larger than the main pipe line. This discharge pipe line should be vented to atmosphere, outside the building, in an area where discharge of oxygen will not constitute a fire risk, where no hazard will arise from the discharge of nitrous oxide and where it is not liable to injure personnel when discharging. It should be well clear of any openable window or air intake. The ends of the discharge pipe lines should be turned downwards to prevent the ingress of dirt and moisture and so placed and protected that frost cannot form or be collected upon them.

85. Means should be provided for manual change-over from one half of the manifold to the other if this becomes necessary.

86. Three pressure gauges should be provided on each automatic manifold and these should be marked to show the gas which they are to supply. Two should indicate the pressures, one on each high pressure side of

the manifold, the third should show the supply pressure. The gauges should be de-greased for oxygen. They are sometimes marked with a band in the operating range. Manual manifolds should have at least one pressure gauge on the high pressure side and one on the low pressure side.

87. Alarm system requirements are referred to in Section XI and electricity supply matters in Section XII.

Sites for gas manifold rooms

88. Oxygen, nitrous oxide, nitrous oxide/oxygen and medical compressed air manifold rooms and storage rooms should preferably be at ground level to provide easy access for cylinder delivery vehicles. If separate gas storage rooms are provided, these should be as near as possible to the manifold room.

Design of manifold rooms and gas cylinder stores

89. Normally the manifold room will contain the manifolds as well as cylinder racks holding sufficient spare cylinders to replace one bank of each manifold. Further replacement cylinders should be supplied from the non-flammable medical gas store room. The size of the manifold store room should therefore be determined from the size of the equipment, as advised by the manufacturer, using a single bank manifold, with one half "duty" and the other half "reserve". Adequate space should also be allowed for cylinder handling. A typical automatic manifold with two "duty" and two "reserve" cylinders is 1·63m. (5 ft. 4 in.) long and 0·61m. (2 ft.) deep. One extra cylinder on each side adds 0·51m. (1 ft. 8 in.) to the overall length, so that a four × six manifold is 3·66m. (12 ft.) long. A typical arrangement is shown in Appendix 14.

90. It may in some cases be expedient to combine the oxygen and/or nitrous oxide gas cylinder storage rooms with the oxygen and/or nitrous oxide manifold room. In these circumstances additional floor area should be provided to accommodate *separate* storage racks for each gas. The racks should be designed on the lines of those on the manifolds but the stored cylinders may be closer together. Typical arrangements for combined manifold/cylinder storage rooms for a single gas are sketched in Appendix 15.

91. Under no circumstances should manifold rooms contain gas cylinders other than those appropriate to their manifolds.

92. It must be noted that oxygen and compressed air cylinders have the same size of outlet connection. If an air manifold is to be located in the same room as an oxygen manifold it will be necessary to take special precautions to minimise the risk of air cylinders being inadvertently connected to the oxygen manifold and *vice versa*. For example the storage space could be divided by partitions and the partitioned areas boldly labelled 'OXYGEN' and 'AIR'.

93. General matters relating to the siting, lighting, heating and ventilation of plant rooms (including manifold rooms) are referred to in Section XIII. Fire precautions are dealt with in Section XIV. Lightning protection may be required, British Standard Code of Practice C.P. 326 should be consulted.

Vehicle access for manifold rooms and cylinder stores

94. Normal commercial lorry access is suitable for gas cylinder delivery vehicles but consideration should be given to the provision of a raised level loading bay where this is justified economically on the basis of cylinder handling costs.

VIII. Liquid oxygen installations

General design

95. Liquid oxygen plant offers considerable advantages over a gas cylinder manifold installation and should be adopted whenever it is shown to be economical. It will usually be found that the use of liquid oxygen is economical for a hospital having more than about 200 acute beds. It will be required in all cases where hyperbaric oxygen therapy is undertaken, except where infant cases only are dealt with.

96. The equipment should include a complete duplicate standby manifold system, with cylinders. The manifold even when it is provided by the gas supplier should be located either in a weatherproof enclosure or in the hospital's own medical gas manifold room.

97. Automatic change-over should be provided from the liquid storage to the cylinder supply but in this situation manual change-over to the "reserve" half of the standby manifold is usually adequate. On large sites, with many scattered buildings supplied from liquid oxygen, it is sometimes considered necessary to provide standby oxygen manifold installations in each main block as well as providing a standby manifold at the liquid oxygen site.

98. The liquid vessel should have a capacity of at least six day's consumption. One day's supply should be held in cylinders on the manifold but where this would involve the connection of more than 10 cylinders (nominal 70m.^{3} or 2,000 ft.^{3}) the additional cylinders may be held in store. The plant usually includes a vacuum insulated evaporator and is commonly referred to as a V.I.E. plant.

99. Normally the whole plant (liquid oxygen plus manifold) is supplied by the gas supplier and is maintained by him. The hospital should provide a suitable site, an access road for bulk delivery tankers and an electricity supply—of which the details are provided by the gas supplier. A typical liquid oxygen plant requires a space of approximately 4m. × 4m. (12 ft. × 12 ft.).

It is important that the space be served by a good road with turning facilities for the bulk oxygen vehicle. This turning space is similar to that required for liquid fuel tankers. Table 12 indicates the access requirements for various bulk oxygen vehicles. The subject requires careful study when oxygen supply problems are considered. The supplier usually constructs the plinth, fence and gate at his own expense provided that he is given a level site. A three-phase electricity supply is required for the motor on the delivery vehicle, present vehicles usually have 12kW. motors. A lighting installation will be required in the area and this should be provided by the hospital.

100. The supply from the liquid oxygen installation is normally available at the standard operating gauge pressure, i.e. 4·1 bar (60 p.s.i.). The supply lines are likely to be longer in the case of a liquid oxygen installation than they would be with a normal manifold installation and this should be allowed for when calculating the pressure drop in the supply system.

Sites for liquid oxygen storage

101. Liquid oxygen vessels should be located in the open and the surrounding area should be so controlled that no combustible materials, smoking or naked lights are allowed within a distance of 6m. (20 ft.) from the containers and associated controls except where this area is cut off by substantially impervious walls of wholly incombustible construction built to a minimum height of 2·4m. (8 ft.) above ground level.

Construction of liquid oxygen storage compounds

102. These compounds should be constructed from stout wire mesh on a steel frame with a minimum height of 1·8m. (6 ft.), and topped by an anti-climbing guard. The enclosure should permit the free dispersal of oxygen concentrations. Since oxygen is heavier than air no sunken bases, manholes, trenches, cable ducts or drain outlets etc. should be installed within the enclosure or, as far as is practicable, within 6m. (20 ft.) of it. The wire mesh to the enclosure should extend to ground level. Adequate precautions should be taken to protect the enclosure and its contents from accidental damage from vehicular traffic.

103. Access gates are required for filling the plant and a back gate, opening outwards, is required for the safety of engineers working on the plant. The gates should be kept locked except when work on the plant is in progress. It is important to ensure that all gates are unlocked before filling or other work on the plant is begun and that there is no undue delay if the supply company's lorries arrive unannounced and need to be discharged urgently.

104. The hard standing for the vessels and the roadway or apron used by the tanker during filling operations should be of concrete or other similar inorganic and non-porous substance. Tarmacadam or similar ignitable road-surfacing materials should not be used on or in the immediate vicinity of the hard standing or filling apron. This apron should be at least 2·4 (8 ft.) wide.

105. Fire precaution requirements are detailed in Section XIV and lightning protection may be required vide British Standard Code of Practice C.P. 326.

TABLE 12

Details of typical liquid oxygen vehicles supplying hospital installations

	105(a)	*150(a)*	*Old 200(a)*	*New 200*	*300(a)*	*400*
Shape	*Sphere*	*Cylinder*	*Cylinder*	*Cylinder*	*Cylinder*	*Cylinder*
Payload	4 Tons (4·1 Tonnes)	6 Tons (6·1 Tonnes)	8½ Tons (8·7 Tonnes)	1·8 Tons (8 Tonnes)	11½ Tons (11·7 Tonnes)	15 Tons (15·3 Tonnes)
Length	22 ft. (6·7m.)	22 ft. 10 in. (7m.)	26 ft. 9 in. (8·1m.)	24 ft. (7·3m.)	34 ft. (10·4m.)	37 ft. 6 in. (11·4m.)
Width	7 ft. 6 in. (2·3m.)	7 ft. 6 in. (2·3m.)	7 ft. 6 in. (2·3m.)	7 ft. 6 in. (2·3m.)	8 ft. (2·4m.)	8 ft. 2½ in. (2·5m.)
Height	12 ft. 6 in. (3·8m.)	11 ft. 6 in. (3·5m.)	11 ft. (3·4m.)	11 ft. 3 in. (3·4m.)	11 ft. 8 in. (3·6m.)	12 ft. (3·7m.)
Turning circle	45 ft. (13·7m.)	46 ft. (14m.)	85 ft. (26m.)	54 ft. (16·5m.)	47 ft.–48 ft. (14·3–14·6m.)	65 ft. (19·8m.)
Gross weight	9–10 Tons (9·2–10·2 Tonnes)	14 Tons (14·3 Tonnes)	17 Tons (17·3 Tonnes)	16 Tons (16·3 Tonnes)	24 Tons (24·4 Tonnes)	28 Tons (28·5 Tonnes)

(a) Obsolescent.

IX. Medical compressed air installations

General design

106. Compressed air tools are replacing some electrical tools in operating theatres because they do not introduce a hazard of electric shock or fire and they can readily be sterilized, complete with connecting hoses, in conventional hospital steam sterilizers, or by dry heat as may be recommended by the suppliers. Steam sterilizing is normally carried out in moist steam at a gauge pressure of 2·2 bar (32 p.s.i.) at 138°C (280°F) in a porous load sterilizer designed to B.S. 3970: Part 1. Sterilizing may also be carried out by dry heat at 160°C (320°F) for at least 60 minutes.

107. Piped compressed air systems for medical and surgical purposes are perhaps less widely used than they could be. Surgeons and anaesthetists have become accustomed to compressed air cylinders on trolleys and their preference for that form of supply probably arises because of doubt about the cleanliness, sterility, reliability, dryness and purity of the air which may be available from a piped compressed air supply. They may also have doubts about the adequacy of the control of the supply pressure. Those responsible for the design and construction of piped medical compressed air installations should ensure that the air is at least equal, in the above-mentioned qualities to that obtainable from cylinders.

108. Piped systems should be designed to provide gauge pressures of 6·9 bar (100 p.s.i.) at the terminal units and 7·3 bar (105 p.s.i.) at the plant room wall. A typical layout of a compressed air plant is shown schematically in Appendix 16 and in a typical plan in Appendix 17. Typical maximum flow rates and line operating pressure for various items of equipment are given in Appendix 7.

109. The cost of a reliable supply of high quality piped compressed air can sometimes be very much lower than that of an equivalent quantity supplied in cylinders. Other advantages are the elimination of the use of oxygen for the purely mechanical functions in most types of patient ventilators, and the reduction of the number of cylinders in use in the hospital as a whole.

110. Most manufacturers of surgeons' tools specify a high degree of cleanliness for the air supply; some surgeons and other users specify that the air must be sterile at the point of delivery to the tool or apparatus. Some tool and equipment manufacturers advise the provision of terminal point filters and in many instances incorporate filters in the driven apparatus. Pre-sterilized, throw-away filters are sometimes used at the apparatus.

111. Where complete sterility of the air at the point of supply is required this need is most appropriately met by a separate plug-in type filter. In this case the filter housing should be sterilizable by one of the methods referred to in paragraph 106. The filter material should have a methylene blue penetration of not more than 0·003% over the range of velocities at which the filter unit operates, when tested in accordance with B.S. 2831. Provision may also be made for fitting a readily detachable lower efficiency pre-filter. It should be noted that an air filter may not prevent micro-organisms growing through the filter material if the material is wet.

112. Freedom from deleterious and toxic products and the absence of any significant quantity of flammable or objectionable vapours and odours is essential at all points of the piped air supply system. Each litre of air at standard temperature and pressure (S.T.P.) should not contain more than 0·0005 mg. of oil mist (particulate) (0·5 mg./m.^{3}) or more than 5·5 mg./m.^{3} (5 ppm.) of carbon monoxide or 900 mg./m.^{3} (500 ppm.) of carbon dioxide. Other substances should not be present in excess of the limits allowed for air for air line breathing apparatus in B.S. 4275. Overheating of the air compressors is likely to result in contamination by carbon monoxide.

113. Reliability of supply can be achieved by providing the main items of moving plant in duplicate, by providing an emergency electricity supply to the plant, and also by providing an automatic emergency supply of air from cylinders via a manifold system, with manual change-over to the reserve bank of the manifold.

114. Insufficient attention has been paid in the past to ensure adequate dryness of air from piped installations. Dryness is important if excessive wear on the surgeon's small precision tools by moisture or ice particles is to be avoided.

115. Most surgeons have hitherto relied on compressed air from cylinders and this had a dew point of the order of minus 40°C (minus 40°F) at atmospheric pressure. This matter is dealt with in detail at paragraphs 138–151.

Air pressure control in plant room

116. The compressors should, of course, operate at a pressure not less than that required for the highest pressure tool or instrument likely to be regularly used and they should also allow for the loss of pressure occurring in the filters, the dryer, the distribution pipe line, and the terminal units. The system should be designed for operating at a nominal gauge pressure of 7·3 bar (105 p.s.i.) at the plant room wall and should be fitted with or supplied via appropriate reducing valves and/or pressure regulators in order to produce this pressure at this point. A service at a nominal gauge pressure of 4·1 bar (60 p.s.i.) at the plant room wall may also be provided when it is evident that extensive parts of the installation will best be served initially at this pressure. A tolerance of ±5% can be allowed on the nominal figure. Any pressure regulator required in the plant room should be fitted downstream of the dryer.

Air pressure control for special sections of the distribution system

117. It may be necessary to operate other more limited sections of some installations with a lower gauge pressure, e.g. 4·1 bar (60 p.s.i.), at the terminal units. This lower pressure would usually be suitable for the intensive therapy unit and the dental department. Where such an arrangement is desirable the supply should be taken off the 7·3 bar (105 p.s.i.) system at convenient points via regulating valves. Each regulating valve should have a pressure relief valve fitted on the low pressure side and this should be designed and installed as described in paragraph 84. The low pressure setting should be high enough to allow for the appropriate pressure drop in the lower pressure system. A section of the system operating at a gauge pressure of 4·1 bar (60 p.s.i.) will be more costly than one operating at 6·9 bar (100 p.s.i.) for the same duty and no decision should be taken to operate at the lower pressure until it has been established that the equipment cannot be operated safely and economically at the higher pressure.

118. All reduced pressure sections of the installation should be constructed so that they are readily convertible for use with a nominal gauge pressure of 6·9 bar (100 p.s.i.) at the terminal unit at a later date. If the reduced pressure is produced in the plant room it may be possible to select for the purpose a pressure regulator which is capable of being converted to maintain 7·3 bar (105 p.s.i.) at the plant room wall at a later date.

Pressure control at terminal units

119. A properly designed central compressor installation should be able to maintain the air pressure at the terminal units within ±5% of the nominal pressure. A pressure regulator which automatically prevents the build-up of excessive pressure on the low pressure side should be chosen where fine control of the operating pressure is required at the point of use. Several suitable pressure regulators are available commercially but these accessories are not usually supplied, either with the surgeons' instruments or as part of the fixed installation, and they should be ordered separately if needed. The regulator control knob should be comfortable to grip, and easy to turn. The regulator should not be liable to creep. It should be fitted with an accurate pressure gauge conforming to B.S. 1780, indicating the pressure on the low pressure side of the controller and should fail safe to the low set pressure. This controller and the filter referred to in paragraph 110 may be incorporated in a single unit, provided the filter housing and filter as necessary can be sterilized by one of the methods referred to in paragraph 106. The unit may be wall-mounted, with flexible connection from the terminal unit, and incorporate a similar terminal unit on the outlet side. Such an arrangement may be particularly appropriate for theatres, for example, where a closely regulated supply may sometimes be required at any one of a number of positions in the theatre.

120. Pressure regulators for fine control and filters of the types referred to in paragraph 119, are often supplied with, or incorporated into, patient ventilators and some other types of medical equipment.

Air inlet filters for compressors

121. These should be either dry medium filters or paper element filters, grade C.A., conforming with B.S. 1701.

Air compressors

122. Medical compressed air should not contain oil in excess of the limit stated in paragraph 112. It should be dust-free and dry. Compressors may be of an approved oil lubricated type or carbon ring or water sealed type provided that the appropriate eliminators are provided for oil droplets, oil mist, water droplets and solids as indicated above. Oil-free compressors are the best type to use but the type envisaged will only remain oil free while the seals to their oil lubricated parts remain effective. If oil lubricated compressors are to be used they should be preferably of two or more stages to ensure low operating temperatures and of a type specially designed to minimise the consumption of lubricating oil. They should be lubricated with straight mineral oil and the rate of oil flow should be very carefully adjusted and maintained. Diaphragm type compressors also produce oil-free air.

123. P.T.F.E. ring compressors should not be used because of the risk of the production of an offensive gas if the rings become overheated.*

124. Water-sealed compressors may be unsuitable for use where the water contains large quantities of solids in suspension or is hard. Water problems can often be overcome by the local installation of simple water treatment plant. A self-cleaning strainer should be provided on the seal water line as close as possible to the compressor and the water supply should not be liable to interruption at any time while the compressor is running. The head required on the seal water line is usually quite small. 1·5m. (5 ft.) is a typical value and the consumption does not usually exceed about 15 litres/kW/minute (2½ gallons/hp/minute). The cost of water and the need to conserve water supplies may sometimes rule out this method of operation. The seal water should not be re-cycled.

125. Compressors should be selected on the basis of economics bearing in mind the need for extreme reliability in continuous service and, in the case of oil lubricated compressors, their proven performance in respect of low air delivery temperature and low oil level in the air delivered.

126. The systems are usually operated by two (preferably identical) compressors, each capable of dealing with the total design load and suitable for continuous operation.

127. The compressor operating pressure will be well above the nominal supply pressure. In the case of a nominal supply gauge pressure of 7·3 bar (105 p.s.i.) the first compressor might have a cut-in gauge pressure of about 9 bar (135 p.s.i.) and a cut-out gauge pressure of 10 bar (150 p.s.i.). The second compressor would have a lower cut-in and cut-out pressure. This higher pressure is required to cater for the pressure loss in the filters, the dryer and the pressure regulator.

128. Great care should be taken in the siting of the air inlet point. The location should be agreed with the medical officer and it should normally be outdoors. Attention should also be paid to ensure that inlets and filters will not be affected by rain, snow, ice, dust, fumes or noxious vapours. The importance of silencing all compressors cannot be too highly stressed. The average sound pressure 1·8m. (6 ft.) from each machine should be measured in at least five positions on each side and

* See H.M. Factory Inspectorate Technical Data Note 2/69—Threshold Limits for 1969.

above, and it should not exceed the International Organisation for Standardisation (I.S.O.) rating of 75. (See also paragraph 200 and Hospital Design Note No. 4 —Noise Control, page 19.)

129. A counter, recording the actual hours run, should be fitted to each compressor to assist in the arrangement of preventive maintenance schedules.

After-coolers

130. After-coolers are essential for all medical compressed air installations and may be air-cooled or mains-water-cooled. The temperature of the compressed air leaving the cooler is likely to be 8° to 15°C (15° to 25°F) above that of the incoming cooling medium, and about 32° to 35°C (90° to 95°F) in summer. The compressed air will be saturated at that temperature. The cooling medium should have the lowest possible temperature in order to reduce subsequent condensation to a minimum and to ensure satisfactory dryer performance. If air-cooled units are used it may be necessary to duct the cooling air from outside the plant room where the temperature may be lower. Mains-water-cooled coolers may give trouble in hard water areas unless the cooling water is suitably treated. Local treatment, on the lines indicated for water sealed compressors, may be a suitable solution and in that case a single plant could serve the compressor and the cooler.

131. Air-cooled coolers are usually more expensive initially but are cheaper to operate than water-cooled coolers.

132. Each after-cooler should be fitted with an automatic drain trap having a by-pass valve for manual draining. The drains should be led via tun-dishes to the nearest gully. Thermometers or thermometer pockets should be fitted at the compressed air inlet and exit points on all coolers and also at the inlet and outlet water connection on water-cooled coolers. In some cases one automatic drain trap and by-pass assembly can serve the after-cooler and the air receiver.

Air receivers

133. Air receivers should be designed to comply with B.S. 487 Part I, for Class III-D. The capacity of the receiver will be related to the compressor pressure under normal conditions. With compressors operating at a gauge pressure of 9·3–10·5 bar (135–150 p.s.i.) the *water** capacity of the reservoir is usually about the same as the output per minute of the compressor. Thus a compressor having a rated capacity of 1,500 litres/minute or 1·5m.^{3}/minute (50 s.c.f.m.) would have a receiver capable of holding 1·5m.^{3} (50 cu. ft.) of water. A safety valve, pressure gauge, fusible plug, and inspection door are required. The receiver must be automatically drained as in paragraph 132.

Separator

134. A separator and filter assembly should be provided upstream of the air dryer. This should be capable of handling air which is super-saturated with water at the compressor operating pressure. The air carries oil droplets and oil mist if oil-lubricated compressors are used. The separator should be fitted with a moisture (and oil as appropriate) trap having an automatic drain, with manual by-pass, to remove the fluids. The separator, trap and filter assembly should remove the oil and water droplets and oil mist. The filter should have an efficiency of not less than 95% when tested with Test Dust No. 2 in accordance with B.S. 2831. Filters having a penetration of 0·5% or less when tested as in B.S. 3928 are sometimes proposed for this location when oil-lubricated compressors are used though the resulting increase in the capital and operating cost of the plant is rarely justified. Nevertheless this may, in some cases, be the best practicable solution to the problem of meeting the oil level limit referred to in paragraph 112.

Activated charcoal filters

135. Activated charcoal filters are sometimes proposed for systems supplied by oil-lubricated compressors but these are rarely justifiable on grounds of cost, even taking into account the need to change the dryer desiccant less frequently as a result. If, for any particular application, complete oil vapour removal is required this can be achieved by the *user* by the insertion of a plug-in type activated charcoal filter inserted between the terminal unit and the user's apparatus.

Air drying

136. Water droplets can be filtered out but water vapour cannot be removed by filtration.

137. The air leaving the after-cooler is saturated at the exit air temperature. Some vapour will be condensed and precipitated as the air passes through any small orifice, or if the pipe route traverses an area having an ambient temperature lower than that in the air receiver.

138. The only satisfactory method of dealing with this problem is to reduce the dew point of the air, either at the source of supply or near to the point of use. As a general rule it will be found most advantageous to condition the air in the plant room itself, because this will eliminate the need for costly traps on the distribution system; traps present a very great maintenance problem.

Air dryers

139. Many compressed air users have hitherto relied upon air from cylinders and, as previously stated, this had a dew point of approximately minus 40°C (minus 40°F) at atmospheric pressure. There is insufficient evidence at present to confirm that a dew point higher than this will be acceptable in all cases, although it is known that a dew point of minus 29°C (minus 20°F) at

* To avoid confusion over free air capacity and compressed air capacity.

atmospheric pressure is adequate for a number of surgical tools. There is very little difference between the cost of a dryer designed for either of these dew points so a dew point of minus 40°C (minus 40°F) at atmospheric pressure should be specified until more is known of the actual dew point requirement. The dew point is a function of the pressure.

NOTE

A dew point of minus 40°C (minus 40°F) at atmospheric pressure is equivalent to a dew point of minus 18°C (0°F) in the line at a line pressure of about 7 bar (105 p.s.i.) which is the usual pressure at the plant room wall for hospital installations.

140. This dew point can only be obtained with desiccant dryers. The elements of a desiccant dryer are illustrated in Appendix 18.

141. The desiccant material is usually contained in two columns constructed to B.S. 487: Part I, Class IIID or B.S. 1500 Class III. The supply air is passed through one column while the other column is being regenerated. When the first column becomes saturated the air flow is diverted to the second column and the moisture in the first is driven off either by heat or by the drying effect of a bleed from the dried air pipe. Dryers using the air only for the regeneration stage are referred to as "heatless" dryers. On all models the controls should ensure automatic repressurization of the re-activated column to prevent shock on change-over.

142. There are three types of desiccant in common use, these are:

(i) Silica gel
(ii) Activated alumina
(iii) Molecular sieve

143. Silica gel is available in granular and spherical form. The spherical form, which is the more free of dust, is a mixture of silica and small quantities of alumina and is available in two grades, one of which is "shatter-proof" in the presence of water. There is also a grade of granular silica gel which is shatter-proof. The wet air inlet section of a silica gel dryer should be filled with the shatter-proof grade, though moisture problems will normally arise only due to malfunction of the after-cooler or of the moisture trap, or to improper drainage of the moist air pipes upstream of the dryer. The adsorbers should not be completely charged with the shatter-proof grade as this will adversely affect the performance of the dryer.

144. Ordinary granular silica gel and the ordinary spherical grade produce dust in the presence of free moisture. Precipitation of moisture at the air inlet side of the dryer cannot be completely avoided.

145. Activated alumina is now widely available in pellet, spherical or tablet form, all of which are non-dusty. Flake and granule forms should not be used because of the dust problem. Activated alumina is less affected by excessive liquid water than silica gel, it is less subject to attrition in use than silica gel and is less likely to break down at the high temperature to which it is exposed in the desorption stage in some makes of heated dryers. Both desiccants will adsorb, to an acceptably low level, the oil vapours likely to be produced in the air from a well-designed and properly maintained oil-lubricated compressor.

146. There is little or no difference between the capital cost of silica gel dryers and activated alumina dryers in the range of sizes likely to be required for hospital work. The running cost of activated alumina dryers will be very slightly higher than that of silica gel dryers of the same capacity but after-filters on alumina dryers will require less attention than those on silica gel dryers.

147. Molecular sieve dryers are unlikely to be appropriate for medical compressed air installations; their advantage lies in their ability to handle efficiently high temperature air and air of low relative humidity. The temperature of the air reaching a hospital dryer is not likely to exceed 38°C (100°F) and the air will always have a relative humidity of the order of 100%.

148. The dryer columns should preferably be designed so that they can be filled and drained of desiccant without disturbing the connecting pipework. The purge air drain should be fitted with a silencer and run into a tun-dish connected to a gully. A similar tun-dish should be provided to collect the fluids discharged from the trap on the upstream filter assembly. The arrangement of the plant should be such that each dryer and filter assembly can be isolated for maintenance purposes without in any way restricting the full supply of air to the distribution system. See Appendices 16 and 18.

149. In a hospital it will be normal practice to connect the electrical control and operating circuits of the dryer to the emergency electricity supply system. It may, however, be advantageous to specify the use of dryers with valves which ensure the uninterrupted flow of air in the event of a failure of the dryer control system. Each dryer should be fitted with an alarm system to give a signal if the dew point of the delivered air rises above 0°C (32°F) at 7 bar (105 p.s.i.) or minus 26°C (minus 14°F) at atmospheric pressure if this can be achieved reliably and at reasonable cost. Alternatively, but less preferably, the alarm may be signalled if the dryer change-over valve fails to operate or (in the case of a heated dryer) if the heater fails to maintain the required temperature.

150. These dryers use a great deal of energy in the desorption process. The heatless dryer consumes up to 15% of the dried air during this stage; the heated dryer requires electric or other heating to perform this function and also uses about 4% of the dried air in the process. On current models this energy is continuously expended when the system is in use, even when the compressors are at rest. The compressor must have sufficient capacity to meet this extra load. Load conditions in a hospital are likely to be such that the compressors may be idle for very long periods at a time and it is uneconomic under these conditions to allow the

automatic drying stage to proceed unchecked, i.e. using purge air or electricity in the desorption stage continuously. It is not permissible on the standard models of most makes of these dryers to use them on an "on/off" basis but it can be easily arranged on heatless dryers. On standard electrically heated long-cycle (e.g. eight hours) dryers some modification of the controls would be necessary to achieve this economy. Further developments in this field may be expected.

151. In the range of sizes required for hospital use there is a very little difference between heated and heatless dryers as regards capital cost and running cost. On heatless models and certain heated models the change from one column to the other is usually made at five or ten minute intervals whereas on most heated models the change-over is made at intervals of about eight hours. The valves and valve-operating mechanisms on the short cycle dryers should be robustly made. The heating elements and thermostats on heated models should be designed for a long trouble-free life and be easily accessible for replacement without disturbing the desiccant bed or the connecting pipework. Most valves on both types need periodical lubrication but this does not usually apply to solenoid valves.

Dryer final filter assembly

152. A filter should be installed downstream of the air dryer. This filter, when tested by the sodium flame test in accordance with B.S. 3928, should have a penetration not exceeding 0·5% over the range of flow up to the full capacity of the dryer.

153. A coarse pre-filter may be installed in association with the filter referred to in paragraph 152 but is unlikely to be essential if the proper grades of desiccant are used. *All* filters, pre-filters, separators and traps should be readily accessible for maintenance purposes.

154. Each dryer and filter assembly should be rated for continuous use of the full free air delivery (F.A.D.) capacity of the compressor, with the air at 100% relative humidity, at the pressure and temperature at which it is designed to leave the after-cooler. Each dryer should be designed to provide a desiccant bed life of not less than two years on continuous full load so that the normal installation, which consists of two complete and independent dryer/filter assemblies would be capable of providing four years of continuous full load service if the two systems are used on a "duty" and "standby" basis.

155. Each of the two sets should be fitted with a safety valve conforming to B.S. 1123 and a 100mm. (4 in.) pressure gauge conforming to B.S. 1780. The gauge is sometimes marked with a signal blue band in the working range.

Compressor control system

156. (i) The control assembly for each duplex compressor should be in three compartments. Each outer compartment should contain the controls for one compressor and its associated equipment. The centre compartment should contain the duty selector switch and the limited amount of wiring and accessories common to both sets. Steel bulkheads should be provided to minimise the risk of the spread of fire from one compartment to the next. Warning notices indicating the presence of medium voltage should be attached to each compartment as necessary to conform with regulations A17 and A19 of the Institution of Electrical Engineers (I.E.E.) Regulations for the Electrical Equipment of Buildings.

(ii) Each compressor plant should be supplied from a separate sub-circuit to a load-breaking isolating switch preferably incorporated in the control assembly and interlocked with its cover. Auxiliary apparatus and associated circuits should be protected by H.R.C. fuses mounted within the enclosure.

(iii) Each motor should have its own starter which should be rated for "frequent duty" in accordance with B.S. 587 and fitted with thermal overload protection. The starters should be of the automatic type so that, once switched on, the motors will automatically re-start after an interruption of the supply. A time-delay should be fitted to ensure that both compressors do not re-start simultaneously. This feature should be indicated by notices in the plant room. All three-phase motors should have single-phasing preventors. Each star/delta starter should be mechanically and electrically interlocked to prevent simultaneous star and delta connection.

(iv) An industrial grade ammeter to B.S. 89 should be connected in the yellow phase connection to each main motor.

(v) A hand/auto switch should be provided for each compressor assembly so that each set may be run continuously under hand control. A lamp, on the appropriate panel and suitably labelled, should indicate when the compressor is operating under these conditions. When any compressor is operated under hand control the alarm system will indicate this.

(vi) The pressure switch settings should be adjustable so that the operating range can be fixed over a reasonable band, and any compressor can be made the "duty" one by means of the duty selector switch.

(vii) Control coils should be designed for phase/neutral connection.

(viii) All indicating lamps should be under-run so as to ensure a lamp life of at least one year.

(ix) An indestructible wiring diagram should be fixed inside the panel.

(x) The same principles should be applied for systems operated by more than two sets.

Emergency operation for compressed air supplies

157. The electricity supply to the compressor and air dryer should be taken from an "essential" circuit on a standby supply where this is available. An automatic emergency supply of air from cylinders via a manifold

should be provided for standby purposes where no standby generating plant is available. Manual change-over to the reserve bank of the manifold will normally be acceptable. In order to reduce the capacity, and thus the cost of the standby manifold facilities, it may be desirable to arrange for surgical or dental work to be discontinued during period of electricity supply failure. The standby manifold can then be equipped with cylinders holding, say, one day's supply for the other compressed air services. The need for standby facilities of this kind may have to be considered even where there is a standby electricity supply available. (See paragraph 92 on precautions to be taken to avoid confusion between air and oxygen cylinders.)

X. Vacuum plant installations

General design

158. The medical vacuum system should be designed to maintain a vacuum of not less than 400 mmHg below a standard atmospheric pressure of 760 mmHg (i.e. an absolute pressure of approximately 360 mmHg) in the pipe line at the most remote terminal unit. This pressure is sometimes referred to as a vacuum of 400 mmHg gauge or 40 cmHg gauge and is approximately equal to a vacuum of 16 in. Hg gauge or 14 in. Hg absolute. It is also approximately equal to a vacuum gauge pressure of 533 mb.

Plant layout

159. Typical plant arrangements are shown in Appendices 19 and 20 and a typical plant room plan is shown in Appendix 21.

Bacterial filters

160. Filters should be provided in parallel between the drainage traps and the reservoir. The arrangement and capacity of the filters should be such that one filter may be serviced without interrupting or restricting the vacuum service as a whole. The filters should have a penetration not exceeding 0·05% when tested by the sodium flame test in accordance with B.S. 3928.

Drainage trap

161. A drainage trap should be installed between the filter and the pipe line. The bowl of the trap should be sterilizable (see paragraph 106). The trap bowl should be transparent or be fitted with a transparent window. The trap and filter may be combined.

Vacuum discharge point

162. The exhaust gases should be discharged outdoors, preferably above roof level of the pump house and buildings in the immediate vicinity and away from windows and other air intakes. The filters should prevent the risk of contamination arising from the discharge from the pumps but they will not remove any offensive odour or gas from the air.

Vacuum pumps

163. The vacuum system should be operated by at least two (preferably identical) pumps. Where two pumps are used each should have a capacity equal to 75% of the total design flow (arrived at as in paragraph 49) since the system capacity will usually result in one pump being adequate to meet the demand actually arising at any time. Each pump should be designed for continuous operation at this load. The same principle of operation should be applied to multi-pump installations except that these may be designed so that 75% of the design flow may be carried with one pump out of use. Pumps providing a vacuum of the level required for hospital vacuum pipe line service are loosely referred to as Rough Vacuum pumps vide B.S. 2951.

164. A clear distinction should be made between the free air displacement (F.A.D.) and the capacity (volumetric throughput) of a pump; the relationship between these quantities has been discussed in paragraph 50. The volumetric throughput of rarified air to be handled by the pumps is two to three times the volume of total design flow in terms of free air as calculated on the basis of paragraph 49 (the appropriate allowances having been made for the resistance to the flow in the pipe line and filter).

165. In order to avoid confusion, the capacity of vacuum pumps for hospital pipe line service should be given both in terms of free air capacity and the volumetric throughput at a suitable and typical actual operating pressure. Thus each of the pumps in Appendix 12 would have a free air capacity of 2,106 litres/minute which at (say) 500 mmHg below an atmospheric pressure of 760 mmHg would be approximately equivalent to a volumetric throughput of 6,318 litres/minute. The pump capacity would therefore be stated as:

Capacity —2,106 litres/minute of free air

and

Volumetric throughput—6,318 litres/minute at a vacuum of 500 mmHg gauge or at an absolute pressure of 260 mm Hg. (The figures would probably be rounded to 2,100 and 6,300.)

166. Water sealed pumps may be used: the comments on water sealed compressors in paragraph 124 apply equally to water sealed pumps. Some water authorities insist on a complete air break (e.g. a supply via a tundish) in the seal water line to this class of plant and such a break should be provided in all such lines to vacuum pumps.

167. Vacuum pumps should be selected on the basis of economics but bearing in mind the need for extreme reliability in service. The guidance in paragraphs 128 and 200, in respect of noise of compressors also applies to noise of vacuum pumps.

168. With most types of rotary pumps driven by three-phase motors it is advisable to fit a pressure-operated

switch in the inlet pipe so that the motor is stopped and pressure build-up or damage by the inadvertent reversal of the motor is prevented. A non-return valve may be fitted as an additional safeguard.

169. When calculating pump capacity attention should be paid to the pressure drop which occurs across the filters as well as the back pressure which will arise from the length of the discharge pipe and from the silencer. This back pressure should not exceed 0·07 bar (1 p.s.i.) at the design peak demand. The pump capacity and operating pressure should allow for these pressure drops.

170. A counter, recording the actual hours run, should be fitted to each vacuum pump so that preventive maintenance schedules may be adjusted.

Vacuum reservoir

171. A vacuum reservoir should be provided on all installations so that the duty pump does not have to run continuously on light loads. Typical vacuum pumps would run continuously when the load was in the range of about 25% to full load (see typical operating curves in Appendix 22). The reservoir should be designed to comply with B.S. 487: Part I for Class III-D. The reservoir capacity should be sufficient to ensure that the number of stop/start cycles does not exceed 30 per hour. In order to avoid confusion it is convenient to relate the reservoir capacity to the pump capacity, in terms of the *water* capacity* of the reservoir and the free air capacity of the pump in litres/minute (s.c.f.m.) at the cut-in pressure. The actual capacity required will depend upon the difference between the pump cut-in and cut-out pressures, this is usually of the order of 100 mmHg. The required reservoir capacity can be calculated from the following figures:

Pump differential	*Multiply free air capacity of pump by figure below to obtain approximate water capacity of vacuum reservoir*
Up to 80 mmHg	3
81 to 130 mmHg	2·5
131 to 160 mmHg	2
over 160 mmHg	1·5

The medium size pump referred to in Appendix 22 has a free air capacity of 2,400 litres/minute (84 s.c.f.m.) at a cut-in pressure of 500 mmHg and if it is operated with a differential of 100 mmHg the reservoir should have a water capacity of approximately 6,000 litres or 6m.^{3} (210 ft.^{3}).

172. Proper provision should be made for draining the reservoir. A robust hand-operated valve in a readily accessible position is usually adequate for this purpose.

173. If water-sealed pumps are used the connections to the pumps are usually taken from the bottom of the reservoir. With other types of pump the connections should be taken from near the top of the reservoir. The connection to the system is usually taken about halfway up the reservoir.

174. A vacuum gauge, at least 100 mm. (4 in.) diameter, complying with B.S. 1780, should be fitted at the reservoir or control gear. It should be calibrated 0–760 mmHg (or 0–1,000 mb.) and indicate 0 at atmospheric pressure. These gauges are sometimes marked with a signal blue band in the working range.

Pump control system

175. The control system should be designed on the same lines as that for compressors, see paragraph 156.

Emergency operation of vacuum service

176. The electricity supply to the vacuum pumping plant should be taken from an "essential" circuit on a standby supply when this is available. Portable suction apparatus, usually electrically operated, and complying with B.S. 4199, should be available for emergency use.

XI. Alarm systems

General principles

177. The alarm system should fulfil two functions:
- (i) Routine indication that the medical gases system has changed over from "normal" to "standby" duty and that action should be taken as soon as possible.
- (ii) Emergency indication that there has either been a complete failure or that a failure on the system is imminent.

Scale of warning and alarm systems

178. Warning and alarm systems should conform generally to the schedule of signals in Table 13. Local considerations will decide the points at which indication of the various conditions should be given. The scale shown in the table might be appropriate for a fairly large district general hospital but in many smaller installations it will be adequate if the alarm indications are given only in the telephone operators' room (or

* In order to avoid confusion over terms such as "Free air capacity" and "Free air equivalent" at various vacuum levels.

other continuously manned position), the engineers' office and a location related to the operating theatres.

Design of alarm system

179. In many hospitals the alarm system for medical gases will be co-ordinated with the alarm system for other services. Where this is the case the medical gas alarm system should be compatible with the other systems. The method of presentation of the alarm signals should be similar in all systems in a given hospital. The advantage of having a common type of lamp for all indicating purposes in a hospital should be considered.

180. There are two alternative alarm systems suitable for use with P.M.G. and V. installations. The first uses flashing lamps and might be appropriate for a complete district general hospital installation; the second uses "steady" lamps and might be suitable for a smaller hospital, or for a new department in an existing hospital or for one or more new "gases" in an existing hospital. Appendix 23 illustrates the principles of the design of the individual alarm units for each system and Appendix 24 shows a complete scheme for a flashing light system. A complete scheme for a steady light system can readily be visualised from a study of the layout in Appendix 23.

181. Malfunction of alarm systems sometimes occurs due to failure of an alarm relay to operate or a contact to "make". The whole of the alarm system should be designed so as to minimise the risk of failure. Alarm relays in the monitored unit should be energised in the normal operating condition and their alarm contacts should break under alarm conditions. Alarm circuit contacts in monitored units should be connected to an alarm terminal block, mounted as remotely as possible and electrically isolated from all other terminals in the monitored unit, so that they can be incorporated into an independent external alarm system, energised from a separate source. Each contact should be connected to two terminals, distinctively marked. The monitored unit alarm contacts should be rated at 250 volts, 3 amps, 50 Hz, and 50 volts 0·5 amps D.C. Absolute reliability and long life are the main requirements of the contacts in the relays of indicating units and their rating should be based upon their actual duty but with these ends in view. The flashing light alarm system described in this section is largely self-monitoring.

Audible alarms

182. At certain points, as appropriate to each site, an alarm should be sounded when any of the following conditions occur:

(i) The reserve manifold is in use on a liquid oxygen supply installation.

(ii) The reserve manifold is in use on a liquid oxygen supply installation and the supply available from it is low.

(iii) The pressure has fallen more than 10% from the rated pressure on pressure gas installations or more than 15% from the rated pressure on compressed air installations or vacuum installations.

Alarm for intensive therapy unit and special baby care unit

183. Because of the danger to patients on respirators operated by piped oxygen or piped medical compressed air, or both, the audible alarms as appropriate should be repeated at the nurses' stations in these units.

Location of warning and alarm indicators

184. In general, the principle of locating alarms in areas where continuous responsible observation can be maintained should be adhered to. Under normal circumstances indicator alarms should not be installed in rooms, offices or any areas which are normally locked or sealed off from the general hospital concourse or corridor system when the occupants are absent. The ideal location for these alarm signals is in a permanently manned area or a general area or concourse immediately adjacent to the responsible officer's room or office. The alarm signal lamps should be visible through a viewing window from the office of the person responsible so that they may be easily seen from within the room during normal working hours. The telephone operators' room is often the best location for the main alarm system.

Principles of annunciating alarm system with flashing alarm lights

185. The main features of a good design are as follows:

(i) The flashing system employs a master alarm unit and an appropriate number of slave alarm units. (See Appendices 23 and 24.) The master unit receives the various alarm signals from individual items of plant and usually indicates them itself and despatches them to the slave units. It normally incorporates a power pack, operated from a single-phase supply, which produces an extra-low voltage D.C. service for the operation of the alarm system. The master unit is commonly sited at the engineers' office since all the signals are required at that point but it could be split, with the signal generating section sited in the plant room area and the alarm section in the engineers' office, if this arrangement is more economical.

(ii) The alarm signals are initially indicated by flashing lamps in accordance with Table 13 but these can be converted to steady light signals by a key-operated muting switch on the master unit. The operation of this switch also converts the corresponding flashing light signals to steady signals on all the slave units and mutes the audible alarm at the master unit only. The audible alarms, where fitted, at the slave units can only be muted by the operation of a similar key-operated muting switch.

(iii) It will be seen from Table 13 that most of the alarm conditions are to be indicated visually only and each signal is illuminated by two under-run lamps in parallel to improve reliability. The lamps are set behind translucent panels engraved with the fault conditions.

186. Each alarm unit has a "LAMP TEST" press button and when this is pressed all the lamps in the unit

are switched on. (This does not test the alarm system!) Each alarm unit has a low-power green pilot light which is on all the time the alarm system is energised. Two under-run lamps are also used in parallel for this signal.

187. In all cases the muting switch deals with one alarm signal at a time. If, after its use, a further alarm condition occurs the relevant alarm light will flash and the alarm will sound (as appropriate) until the muting switch is again operated. The alarm lamps are extinguished, the alarm (as appropriate) is silenced and the alarm system is re-set automatically when the fault is remedied.

188. The flasher is usually of the solid-state self-monitoring type. If the flasher fails or the extra-low voltage supply fails a "SYSTEM ALARM" condition is created and when this occurs a twin lamp assembly indicates this on another translucent panel and sounds an independent local alarm. This "system alarm" circuit is energised by a dry battery housed within the master alarm unit. Another key-operated switch is provided for muting this alarm. The "system alarm" circuit is re-set automatically when the fault conditions have been remedied. A further test button is provided on the master alarm unit which will simulate an extra-low voltage supply failure or a flasher failure so that the "system alarm" circuit may be tested.

Principles of annunciating alarm system with steady alarm lights

189. The steady light system operates from the same sensing units as the flashing system and the lamp indications are also on the lines indicated in Table 13, but whereas with the flashing system more than one panel is illuminated as the supply situation deteriorates this does not happen with the steady light system; in the latter only one panel of a unit is illuminated at any time. The arrangement is as follows:

(i) The alarm units incorporate a step-down transformer to provide the extra-low voltage required. Twin lamp units, with under-run lamps, are used for each indication, as on the flashing unit and these are arranged behind translucent panels in a manner which will make it clear if only one of the two lamps is on.

(ii) A green panel is illuminated and indicates that the extra-low voltage supply is on and the corresponding "gas" supply system is operating normally. The lamps in the green panel are extinguished when any "fault" condition occurs on any "gas" system.*

(iii) A white panel is illuminated when the "fault" is a change-over to the "reserve".

(iv) An orange panel is illuminated and the white panel lights are extinguished when the supply in the "duty" bank has fallen to 10% of its capacity with the "reserve" bank empty on an automatic manifold, or the reserve supply is low on a liquid oxygen installation.

(v) A second orange panel is illuminated and the lights in the first orange panel and the white panel are extinguished when the "gas" supply mains pressure has fallen 10% below the rated level.

(vi) For compressors and pumps the white light indicates that a standby set is running or one set is not available. The first orange light indicates that the compressed air manifold is in use or failure of the dryer. There is no "first" orange light on the vacuum panel. The second orange light indicates that the mains pressure has fallen 15% below rated pressure for either system.

(vii) The panels are suitably engraved, and audible alarms are provided as in Table 13. Provision is made for muting the audible alarm and a "Lamp Test" button is provided at each unit, to test the lamps on that unit without disturbing any other part of the system. All the lamps in the unit are switched on when the test button is pressed.

Provision, installation and connection of signal light fittings and alarms

190. Annunciating and visual alarm units with flashing lights for P.M.G. and V. are usually supplied by the medical gases contractor and they are usually also erected and connected by him. Alarm units with steady lights are usually supplied by the medical gases contractor but are sometimes erected and connected by the electrical contractor. The sensing devices and operating switches and relays required for the initiation of the signals are normally supplied by the medical gases contractor.

191. The alarm circuit conductors to the slaves should be designed so that when the green, white and one orange panel on every slave is illuminated simultaneously on a flashing system the pressure loss does not exceed 5% of the rated operating voltage. On a steady system the loss should not exceed 5% when any signal is illuminated simultaneously on all slaves. The loop resistance between the master alarm unit and the most remote item of monitored plant can, typically, be as high as 50 ohms if the alarm system is operated at 50 volts. A 50 volt system has other advantages over one operating at a lower voltage. The wiring to the P.M.G. and V. equipment in the manifold and plant rooms should be carried out with M.I.C.S. cables, or cables of the type indicated in the Institution of Electrical Engineers (I.E.E.) Regulations for the Electrical Equipment of Buildings, Regulation B.16, provided they are given adequate protection against mechanical damage. The tails at cable terminations should be enclosed in correctly colour coded sleeving to reduce the risk of wrong connection. All signal lighting and alarm indicator services should be connected to an "essential" circuit on a standby supply.

* Some of the slave units are not intended to display every alarm signal and where this is the case the green panel remains illuminated except when another signal indicates that action by the recipient is required.

TABLE 13

Schedule of alarm signals (lights and audible alarms)

Type of plant	*Condition to be indicated*	*Location of sensing device*	*Indication*	*Points at which indication is to be given in a large hospital*
Manual manifold	"Duty" bank fallen to 10% of its capacity	Manifold header	Rapidly flashing orange light, continues until "Duty" bank replaced.	A F
Automatic manifold	Exhaustion of "Duty" bank and change-over to "Reserve" bank (i)	Manifold control panel	Rapidly flashing white light, continues until exhausted bank replaced	A B C
Automatic manifold	"Duty" bank fallen to 10% of its capacity: "Reserve" bank empty (ii)	Manifold control panel	Rapidly flashing orange light continues until "Reserve" bank is replaced. (White light also continues to flash until "Reserve" bank is replaced)	A C D E X
Liquid oxygen plant	"Reserve" manifold in use	Liquid oxygen unit	Rapidly flashing white light and audible alarm continues until liquid supply restored	A B C D X
Liquid oxygen plant	"Reserve" manifold in use and manifold supplies low	Liquid oxygen unit	Rapidly flashing orange light, and audible alarm continues until liquid supply or manifold supply restored. (White light also continues to flash until liquid supply restored)	A C D E X
Compressed air plant and compressed air dryer	"Standby" manifold installation in use	Plant room	Rapidly flashing orange light, continues until a compressor is in operation again	A C D E
	Failure of dryer	Plant room	Rapidly flashing orange light, continues until dried air supply restored	
Compressed air plant and vacuum plant	Standby set running or either set not available or on hand control	Plant room	Rapidly flashing white light	A C
All types, including compressed air and vacuum installations	Oxygen, nitrous oxide or mixture supplies fallen 10% below rated pressure. Compressed air or vacuum fallen 15% below rated pressure	Manifold room or Plant room (on supply main)	Rapidly flashing orange light and audible alarm continues until danger is over. White light also continues to flash until both banks have been replaced if the situation indicates that both banks are empty	A C D E X

A Manifold room or oxygen plant room.
B Porters' main rest room or equivalent.
C Hospital Engineers' office area.
D Telephone operators' switchboard.
E Theatre Superintendent's office (with additional alarms so that the sound can be heard in each theatre).
F Other point as necessary.
X Hyperbaric chamber area in the case of oxygen only.

NOTE (i), (ii) The "Reserve" bank at (i) has become the "Duty" bank at (ii).

Other audible alarms may be required for oxygen or air as indicated in paragraph 183.

XII. Electricity supply to medical gas installations

General principles

192. The whole of the electrical installation should be carried out in accordance with the I.E.E. Regulations for the Electrical Equipment of Buildings.

193. The electricity supply to medical gas installations should, as far as is practicable, be taken from separate circuits from a distribution board which is an "essential" board with a standby supply.

Earthing

194. Pipe lines should be bonded to the consumer's earth terminal as required by Regulation D 10 of the I.E.E. Regulations. This bonding should be made as near as possible to the point at which the pipe line enters the building from the plant. The size of the bonding conductor should be in accordance with Table D.2M of the Regulations. *The pipe lines should not themselves be used for earthing the electrical equipment.*

195. Flexible pipe line connections between the compressors or vacuum pumping plant and the fixed pipe lines should be bonded across to comply with this requirement. Flexible connections in the fixed pipe lines should not normally be used but if they are specially approved they should be similarly bonded across.

Installation of electric cables

196. Distribution pipe lines should be physically separated from the metal sheath and armour of electricity supply cables as well as from metal ducts, trunking and bare earth-continuity conductors associated with any electric cables which operate at low voltage or above (see Regulation B53 of the I.E.E. Regulations). Every effort should be made to maintain this electrical segregation so as to minimise the possibility of electric fault currents being carried by the medical gas pipes. Where piped gases and electric wiring are enclosed in a boom, gas control panel or other similar enclosure the wiring should be carried in separate conduit or trunking so that it cannot come into direct contact with the piped gas installation. Where this is not possible the wiring should be secured in the most effective possible manner clear of the medical gas pipes, and the cables should comply with I.E.E. Regulation B16.

XIII. Accommodation for medical gases, compressors and vacuum pumps

General principles

197. (i) All buildings and rooms used for the storage, production or supply of medical gases, medical compressed air or medical vacuum should conform with the fire precaution requirements set out in Section XIV.

(ii) Lightning protection may be necessary for independent buildings and British Standard Code of Practice C.P. 326 should be consulted.

Sites for plant rooms

198. Compressors and vacuum pumps should not be located in the medical gases manifold room, and the compressor/pump plant room should not be used for storing full or empty medical gas cylinders. The compressor and vacuum pump plant rooms should preferably be in close proximity to the manifold rooms. (Manifold rooms are, of course, plant rooms.)

199. Any standby manifold for the compressed air installation should preferably be located in the medical gases manifold room and not in the vacuum pump and compressor room. In siting the pumps and/or pump house due regard should be paid to avoiding contamination of other systems by oil or oil mist, and to the fire or explosion hazard (e.g. near stored oxygen, either in cylinders or in tanks).

200. When any compressor or vacuum pump has to run in a noise sensitive area (other than the plant room itself) the sound pressure level of the plant should not exceed the I.S.O. rating of 45 when measured at any point 1·8m. (6 ft.) from the machine. When any compressor or vacuum pump is working in an operating theatre the sound pressure level should not exceed the I.S.O. rating of 30 at any point 1·8m. (6 ft.) from it.

201. Great care should be taken in the siting of the air intake for the compressors. This should be sited with the advice of the medical officer so that there is no possibility of drawing contaminated air into the compressed air installation. It should be sited well clear of the discharge from vacuum pumps and away from all sources of dirt, fumes and odours. Similar care is required when locating the vacuum discharge.

Noise control

202. The various methods for reducing noise are given in Hospital Design Note No. 4—Noise Control. The Note gives general guidance and recommends the siting of compressors and vacuum pumps away from the main hospital buildings; even when this is done it is still necessary to avoid complaints of nuisance due to noise.

203. In cases where remote siting is not possible and where the plant room is inside the hospital building the following special precautions are necessary:

(i) The walls of the plant room should be designed to ensure that the noise level outside the plant room is acceptably low. Appendix VII of Design Note No. 4 gives details of the attenuation of various wall constructions. The sound power level can be obtained from the compressor and pump makers. In some cases treatment of the plant room walls will be required in order to keep the noise in the plant room itself to an acceptable level.

(ii) The door of the plant room should be designed to prevent the transmission of sound beyond acceptable limits. Attenuations for doors are given in Appendix V of Design Note No. 4.

(iii) Measures should be taken to prevent the passage of excessive noise through the plant room windows or ventilators (see Design Note No. 4).

(iv) The compressors and pumps should be mounted on properly selected anti-vibration mountings, where necessary, to minimise transfer of noise and vibration to the structure of the building.

(v) All pipework and electrical conduits connected to the plant should be fitted with flexible connectors where necessary to prevent the transmission of noise and vibration along the pipe lines and conduits.

(vi) It will usually be necessary to fit silencers to compressors and vacuum pumps in order to meet noise limit criteria.

Storage rooms for other gases on hospital sites

204. The person responsible for ordering and storing medical gas cylinders is, in many instances, also responsible for supplying gases used in the laboratories and workshops. He should note that oxygen, nitrous oxide, nitrous oxide/oxygen mixtures and other gases containing oxygen should not be housed in the same room as flammable gases such as hydrogen and acetylene.

205. Storage rooms detached from other buildings should be of single storey non-combustible construction having a fire resistance of at least two hours.

206. If a storage room is part of a building used for some other purpose the following features should be incorporated:

(i) The storage room should have an outside wall on the ground floor of the building and have direct access to the outside air.

(ii) There should be no direct access into the storage room from any other part of the building.

(iii) The storage room should be separated from the rest of the building by substantial internal walls, ceiling and floor having a fire resistance of at least two hours.

(iv) The access door should open outwards directly into the open air and should have a fire resistance of one hour.

(v) There should be no drains within the storage room or near the door. It is advisable not to

have roof lights, other than North lights, and when windows are provided they should be so arranged as to protect the contents of the storage room from the direct rays of the sun.

(vi) The storage room should be so sited that in the event of a fire within the room the means of escape from the building in which the storage room is housed, or from nearby buildings or areas is not prejudiced.

Electrical installation in manifold rooms and plant rooms

207. All electrical wiring in these rooms should be carried out using M.I.C.S. cable or cable of the type indicated in I.E.E. Regulation B16 with adequate protection against mechanical damage. Lighting to an illumination level of 50 lux (5 lumens/sq. ft.) should be provided by means of bulkhead lighting fittings in manifold rooms. The lighting level in other plant rooms should be 200 lux (20 lumens/sq. ft.). Each compressor, vacuum pump and manifold should be supplied from a separate sub-circuit.

Heating of manifold rooms, plant rooms and full cylinder stores

208. The ambient temperature of manifold rooms and plant rooms should be maintained within the range of 10°C (50°F) to 38°C (100°F). Cylinders of the mixture of 50% nitrous oxide and 50% oxygen received in cold weather should be stored horizontally at a temperature within this range, for at least 24 hours before connection to the manifold.

Ventilation of manifold rooms, plant rooms and full cylinder stores

209. Ventilation should be provided at both high and low levels to the outside air to allow circulation of air. The ventilation openings should be vermin proof.

XIV. General fire and safety precautions

General principles

210. The siting and general structural principles for the design of liquid oxygen storage accommodation are stated in Section VIII and for gas manifold rooms, and other storage rooms for gases for the hospital service are stated in Section VII. The following paragraphs indicate the general precautions which must be taken to minimise the risk of fire and explosion in accommodation of this kind and instructions are also given in Hospital Technical Memorandum No. 16—Fire Precautions.

Restriction on use of storage accommodation

211. Main stocks of oxygen, nitrous oxide, medical compressed air and other medical gas cylinders should be stored in a special storage room and no other materials should be stored in the room. Cylinders of hydrogen, acetylene and other flammable gases should not be stored in this room.

212. Cylinders should be stored in racks and used in rotation as received. Empty cylinders should be clearly marked to indicate that they are empty e.g. with a chalk "EMPTY" marking and they should be stored separately from the full cylinders.

213. Manifold rooms may be used for limited storage of cylinders only to the extent indicated in paragraphs 88–92. Reference has already been made to the precautions to be taken to minimise the risk of confusing the oxygen cylinders with the medical compressed air cylinders.

Notices

214. Smoking, welding and naked lights should be prohibited within or near the manifold room, storage room and liquid oxygen compound area. This prohibition also applies to the vicinity of the outlet of the discharge pipe from medical gas safety valves. Distinctive signs should be provided within and outside these areas to indicate this requirement, e.g. "SMOKING, WELDING AND NAKED LIGHTS PROHIBITED—MEDICAL GAS STORAGE AREA" In addition a notice clearly indicating the contents of these areas should be displayed.

215. At the discretion of the medical and fire authorities notices may be posted in wards and departments informing staff of the location of those medical gas control valves which should be turned off in the event of a major fire in the ward or department.

Access to manifold rooms and liquid oxygen storage areas

216. Access to the manifold room and liquid oxygen storage area should be controlled. A duplicate key of each should be kept in a locked box with a transparent front cover at the main fire entrance, gatehouse or equivalent building so that in the event of a fire the Fire Brigade officer may obtain a key immediately he enters the boundary of the hospital. The transparent front of the box should be labelled thus

BREAK COVER TO OBTAIN KEY OF FOR EMERGENCY USE ONLY

Fire detection system

217. Detector heads should be installed in the medical gases manifold room and medical gases cylinders stores in any hospital having a fire detection system.

General safety precautions

218. The following guidance applies to cylinders used for all P.M.G. and V. installations and is also relevant to cylinders used in the pathology department and workshops:

(i) Cylinders should be handled with care. Rough handling may result in damage to cylinders and cylinder valves. They should never be dropped or allowed to come into violent contact with one another or with any hard object. When valve caps are fitted they should remain in place while the cylinder is being moved.

(ii) Cylinders and medical gas installations should be kept as far as possible from all sources of heat at temperatures above 49°C (120°F).

(iii) Oil, grease or other combustible substances should never be used on valves, gauges, regulators or any fittings associated with medical gas cylinders and cylinder installations.

(iv) Cylinders and other apparatus connected with the supply of medical gas should not be handled with rags, gloves or hands if these are contaminated with oil, grease, bituminous compounds, acids or corrosive substances.

(v) Cylinder valves should be closed completely after use and when the cylinder is empty. Excessive force should not be used on valve keys.

(vi) Particles of dust and dirt should be cleaned from the outlet of the cylinder by slightly opening and closing the valve before it is connected to the apparatus. (This procedure should not be adopted when connecting hydrogen cylinders for pathology laboratory service etc; these should be dusted with a clean brush.)

(vii) Valves on new cylinders should be opened cautiously and slowly in order that any leakage may be detected before a serious escape of gas can occur. Tests for leakage should be made by brushing with a frothing detergent.

(viii) An automatic pressure regulator should be used to maintain the outlet pressure at the correct value (gas should not be used except through a regulator valve).

(ix) Cylinders with damaged valves or threads should be appropriately labelled and returned to the suppliers.

(x) Cleaning materials, overalls etc., should not be hung over cylinders or other parts of the medical gas installation.

(xi) Defective components associated with medical gas installations should be withdrawn from service with a minimum of delay and should be replaced only with items designed for the service.

XV. Testing and commissioning

General principles

219. All manifolds, compressors, air dryers, vacuum pumps etc., should pass the appropriate tests at the makers' works, and certificates indicating performance and sound pressure level should be available in good time. Proper site control should be exercised to ensure that all materials and workmanship are of the quality specified.

220. The following procedures should be satisfactorily completed towards the end of the construction period and before the installation is formally handed over:

(i) Pressure test for leakage in pipe lines only
(ii) Check valve tightness
(iii) Test relief valve operation
(iv) Pressure test for leakage in complete installation
(v) Check for satisfactory mechanical operation and non-interchangeability of each terminal unit by means of test probes
(vi) Check for cross connections (sometimes referred to as "anti-confusion test" or "continuity test")
(vii) Check flow rate at each terminal unit
(viii) Check total flow rate and delivery pressure
(ix) Check satisfactory operation of manifold change-over valves
(x) Check satisfactory operation of liquid oxygen, compressed air and vacuum plants and all manifolds including service point panels
(xi) Check performance of signalling system
(xii) Purge the completed installation
(xiii) Check the purity of the gas supplied at the terminal units

The whole of the compressed air distribution system should be tested on the assumption that it will eventually be operated with a nominal gauge pressure of 6·9 bar (100 p.s.i.) at the terminal units even though parts of the system may be operated initially at 4·1 bar (60 p.s.i.). The formal commissioning procedure should be completed in accordance with Hospital Technical Memorandum No. 17—Commissioning of Engineering Services.

221. Procedures (i), (ii) and (iii) in paragraph 220 will normally be completed in sequence for one gas at a time. After completion of procedure (iv) (separately for each gas) and (v) arrangements should be made for tests (vi) and (vii) to be completed for the whole installation at one session. The remainder of the procedures are then completed, in the order given, for each gas.

222. Pressure testing for leakage is carried out in two stages for pressure gas systems and in three stages for vacuum systems. The first pressure tests cover the complete pipe lines and isolating valves only. The other pressure tests cover the whole installation, including terminal units and theatre fittings.

223. Medical quality compressed air should be used for pressure tests on all systems. Vacuum installations should be thoroughly dried out, usually by the operation of the vacuum pumps, before final vacuum testing is undertaken.

224. Each valve tightness test should be held for not less than 15 minutes.

225. During pressure tests the pressure in the systems will vary with the temperature according to the gas laws. Appendices 25 and 26 indicate the variations which are to be expected but it should be noted that assessments must be based on the mean temperature of the gas at the time the observations are made. The pressure will rise or fall by 1/273 per °C or 1/460 per °F change in temperature.

226. If the relief valves cannot be set to protect the installation during the pressure test they should either be temporarily replaced by others which can withstand the test pressure or be blanked off.

Pressure test for leakage in pipe lines of pressure gas systems

227. The completed pipe lines with all ends sealed (but terminal units not fitted), and all valves on the distribution system open, but with control panels and theatre fittings disconnected, should be tested to twice the working pressure or a gauge pressure of 10·3 bar (150 p.s.i.) whichever is the greater. This pressure should be held for 24 hours and no leak should occur during this period.

Test for leakage on vacuum systems

228. The completed pipe lines with all ends sealed (but terminal units not fitted), all valves on the distribution system open, and control panels and theatre fittings disconnected should be tested at a gauge pressure of 6·9 bar (100 p.s.i.). This pressure should be held for 24 hours and no leak should occur during this period.

Valve tightness tests

229. On completion of the pressure test on the pipe line all isolating valves should be tested for tightness by closing them in sequence and releasing the pressure on the downstream side. No leak should occur during these valve tests.

Relief valve test

230. On completion of the isolating valve tightness tests the pressure on pressure gas systems may be reduced for the purpose of testing the safety valves. The service safety valve should be fitted and this should be tested to ensure that it discharges safely at 125% of the working pressure.

Test for leakage on completed installations—pressure gas systems

231. With all terminal units and theatre fittings connected the whole installation should be tested at the working pressure which should be held for 24 hours and no leak should occur during this period.

Test for leakage on completed installations—vacuum systems

232. With all terminal units and theatre fittings connected the whole installation should be tested at a gauge pressure of 0·7 bar (10 p.s.i.); this should be held for 24 hours and no leak should occur during this period.

233. After the initial drying out of the pipe line by the operation of the vacuum plant, the completed vacuum system should then be tested. The system should be exhausted to a vacuum of 210 mmHg absolute and, after the initial drying-out of the pipe line, the pressure should not increase by more than 1 mmHg in one hour. This test pressure should be held for 24 hours. A pressure rise in excess of 1 mmHg per hour normally indicates the need for remedial work and further tests.

234. The test pressure during the vacuum test may vary from its original setting as a result of the variation in the ambient temperature. The charts in Appendix 27 may be used to assess the order in change of pressure attributable to any change in the temperature of the system during the test period. (See also paragraph 225).

Tests for proving correct connections to all P.M.G. & V. systems

235. Each system (oxygen, nitrous oxide, medical gas mixture, compressed air and vacuum) should be tested in turn, preferably at the same session. The tests should not ordinarily be embarked upon until all work on all installations is completed.

NOTE

Tests of this kind should also be undertaken after any alterations are made to an existing system.

236. Medical gases should not normally be used for these tests because of the risks arising from their discharge. The medical compressed air plant may be used to supply the test gas but air from ordinary industrial lubricated compressors should not be used. If no medical compressed air plant is available the supply may be obtained from cylinders of medical quality air.

237. The system under test should be connected at the normal working pressure. The other systems should be isolated at their source of supply but all other isolating valves on all systems should be OPEN.

238. The testing officer should check in every room to ensure that the test air is delivered from every terminal unit bearing the name of the "gas" and is not delivered from any other terminal unit.

239. A gauge pressure of 0·7 bar (10 p.s.i.) is usually adequate when vacuum systems are tested in this manner.

Total flow rate and delivery pressure test

240. It is difficult to devise a quick and easy test for a new installation which will ensure that a satisfactory flow rate and pressure will be available at every terminal unit under normal working conditions. Nevertheless some attempt to simulate working conditions will be necessary. The tests may be carried out with sufficient accuracy by providing an appropriate number of small metered leaks while further typical flow rate and pressure tests are taken at vulnerable and representative points in the installation e.g. in the theatre suite, the labour

ward, the intensive care area, the hyperbaric treatment area etc. The total leak rate should be approximately equal to the total design flow.

241. The tests can be made with bobbin type flowmeters or plug-in type flow metering equipment designed to pass the quantities specified in paragraphs 34 to 48 with diversity as indicated therein. Calibrated jets conforming to B.S. 720 form the basis of the test equipment for pressure gas installations as illustrated in Appendix 28. When conducting the tests on vacuum installations a flowmeter assembly should be used as indicated in Appendix 29. The jet metering devices should be stamped to show:

(i) jet size
(ii) air equivalent of "medical gas" for which it is calibrated
(iii) rate of flow and pressure for which it is calibrated

242. The total flow tests on oxygen, nitrous oxide and medical gas mixture installations should not be conducted with these gases but with medical quality compressed air at a gauge pressure of 4·1 bar (60 p.s.i.). The metering devices for these tests should be marked "air equivalent of medical gases". Test jet units for general medical gases, including analgesic gas mixtures, should be calibrated to pass 40 litres, 20 litres and 15 litres per minute at a supply gauge pressure of 3·9 bar (57 p.s.i.). A further test unit is required for peak flow tests of analgesic gas mixtures at 275 litres/minute under the conditions indicated in paragraph 32. Units for testing supply lines to hyperbaric oxygen chambers should be calibrated to pass the maximum rate of flow expected or, in the absence of any clear advice, 400 litres/minute at a gauge pressure of 3·9 bar (57 p.s.i.). Units for compressed air should be calibrated to pass 250 litres/minute and 50 litres/minute for theatres at a gauge pressure of 6·9 bar (100 p.s.i.), 50 litres/minute for general terminal units and 65 litres/minute for dental department terminal units, the last two at gauge pressures of 3·9 bar (57 p.s.i.). Units for vacuum should have flowmeters suitable for passing up to 40 litres/minute of free air.

Tests of manifold change-over valve

243. The action of the manifold change-over valve can be tested by connecting a small cylinder of the working gas or of medical quality compressed air on each side of the manifold and discharging it to a carefully sited leak whilst the operation of the pressure gauges and change-over valve is checked. Each half of the manifold should be tested in this manner. This test could be carried out on every automatic manifold during the period when the flow rate tests are in progress. There is no automatic change-over between the two banks on the liquid oxygen emergency supply manifold or on the compressed air emergency supply manifold. Pressure regulating valves effect the change-over to the manifold supply in these cases and they will be checked as in paragraph 244.

Plant operation tests

244. The following checks should be carried out before the alarm system is tested:

(i) For liquid oxygen installations check that the heater unit, where fitted, vapouriser pressure controls, safety valves and pressure controls and warning devices operate efficiently. Check effectiveness of change-over to reserve manifold.
(ii) For manifold installations check operation of all magnetic and pneumatic valves. Check operation of heater where fitted.
(iii) For compressed air and vacuum plants check for correct rotation and current at full load. Check for excessive vibration and noise. Check operation of all automatic devices. Check effectiveness of change-over to reserve manifold. Check effectiveness of all pressure regulating, relieving and warning devices. Check operation of all automatic traps, test trap by-pass valves. Check consumption of air used in the desorption stage. Check dew point of delivered air. See paragraph 247 for check of purity of air.
(iv) Check that each item of plant is capable of operating continuously at its maximum continuous rating.
(v) Check accuracy of all pressure gauges and thermometers.
(vi) Check insulation resistance and effectiveness of earthing of all electrical items.

Signalling system test

245. This test should be carried out simultaneously with the test of the manifold change-over valve.

NOTE

See paragraph 190 regarding the responsibility for the supply and installation of the alarm signalling system. It will normally be necessary for the medical gases contractor's representative to be present if the alarm systems are installed by the electrical contractor (who carries this out with the co-operation of the medical gases contractor).

Purging medical gas installations

246. Each system should be purged with the working gas on completion of all other tests on the installations.

Gas identification and air purity check

247. The engineer is not normally responsible for establishing the acceptability of the gas available at the terminal unit but medical officers usually wish to have the purity tested since it is possible that pure gas supplied in cylinders may become contaminated by residues in the equipment and installation. Many engineers prefer to carry out a gas identity test before assisting at joint medical/engineering tests when the installation is handed over to the anaesthetist or physicist responsible. Beckman analysers and Servomex analysers are available for checking oxygen but there is no simple instrument for field testing the acceptability of nitrous oxide or medical gas mixtures. The air purity should be proved to the satisfaction of the engineer and anaesthetist or physicist by the installers when any medical compressed air supply plant is first commissioned. If the engineer has satisfied himself that the final air filter in the plant room complies with the requirements of paragraph 152 and that it is properly installed he may assume that the air

will continue to be sufficiently free from oil mist and particulate matter after the initial proof tests. The concentration of CO and CO_2 may be checked by the use of Draeger gas detector tubes. Draeger tubes are unsuitable for checking the purity of other medical gases.

248. An oxygen/nitrous oxide differentiator is being developed. It will indicate oxygen by a pointer on one section of the dial and nitrous oxide on another section but the instrument will not give any indication on a mixture of 50% oxygen and 50% nitrous oxide. There is also now an oxygen detector which will be of value in identifying oxygen, the oxygen content of oxygen/nitrous oxide mixtures and, of course, air but there is no instrument for identifying nitrous oxide.

XVI. Maintenance

General principles

249. Medical gas plant and installations should be subjected to Preventive Maintenance (P.M.) as recommended in Hospital Technical Memorandum No. 13, and should be under the responsibility of an engineer, irrespective of whether or not a full preventive maintenance scheme is being implemented in the hospital as a whole.

250. The suppliers should be required to provide complete "as fitted" drawings, circuit diagrams, valve charts and maintenance instructions which should be used as the foundation for the preventive maintenance programme. For new plant the P.M. programme supplied by the manufacturers should be used. The terms used in the P.M. programme and their definition are as follows:

Examine—to make a visual examination without dismantling, to verify that the plant or equipment is in efficient and safe working order.

Test —to operate the plant or equipment and/or use the appropriate testing instruments to ensure that plant or equipment is functioning correctly.

Check —to make a thorough inspection for damage and wear, also to ascertain that the plant or equipment is properly adjusted to conform to the correct standard.

251. The engineer should examine the effectiveness of the various pressure regulators each day by observation of the supply pressure gauges and, simultaneously, ensure that any indicating lights show the actual condition at the time of this routine inspection. If any manifold is observed to be in operation on its "reserve" bank he should ensure that replacements for the empty cylinders will be available in good time.

252. The frequency of maintenance routines is given in the craftsmen's manuals associated with Hospital Technical Memorandum No. 13. Practical experience with equipment of different manufacturers might well result in the need to vary some frequencies in particular installations.

Overhauls

253. In addition to the examination, tests and checks set out in the P.M. programme arrangements should be made every two years for a general overhaul of all medical gas installations. This is likely to involve the temporary introduction of cylinder gases during the overhaul of the compressors.

Exclusions

254. The P.M. programme does not cover the regular inspections considered essential for the safe operation of bulk liquid oxygen installations and suitable arrangements must be made in accordance with the Factories Acts and the insurance company's requirements where these installations are the property of the hospital authority. The programme does not cover the maintenance of equipment operated from the piped medical gas installation.

Organisation

255. Inspection and maintenance should be carried out using one of the following methods:

(i) on a contract basis by an approved specialist company;

(ii) by properly trained hospital staff (essential for daily, weekly and three-weekly tasks);

(iii) by a combination of (i) and (ii) with a clear division of responsibility, e.g. electric motors and water treatment apparatus maintained by hospital authority, remainder maintained by contract.

Records

256. The results of each inspection and of any action taken to correct faults found during the inspection should be recorded. Arrangements should be made so that action can be instituted to correct apparatus giving constant trouble caused by faulty design or by unsatisfactory conditions of any nature. There should be provision whereby the maintenance tasks and their frequency can be modified when necessary. Counters which record the hours of operation of each compressor and vacuum pump have been suggested in other sections. The readings of these counters can be used in conjunction with the recommendations of the manufacturers for the modification of the programme.

Maintenance of filters

257. It is not possible to specify in advance the frequency with which the various filters on the medical gases installation should be cleaned or changed. Inspection should be in accordance with the manufacturers' recommendations and take account of local conditions.

NOTE

Plug-in type terminal filter assemblies in operating theatres and elsewhere do not normally form part of the medical gas pipe line installation.

Maintenance of local water treatment equipment

258. The provision of small water treatment plants, locally sited, has been proposed for water-sealed compressors and water-sealed pumps as well as for water-cooled after-coolers. These will need servicing at intervals which depend upon the analysis of the water and the type and size of water treatment plant used.

Maintenance of air treatment plant

259. It is not possible to specify the frequency with which air dryer desiccant charges should be replaced. These will have a long expectation of life as indicated in the section on compressed air installations. The desiccant should be checked at intervals and by methods recommended by the supplier. The charge should be replaced when the dryer vessels are pressure tested and otherwise in accordance with the recommendations of the supplier.

Equipment check lists

260. The installations will include a great number of isolating valves, pressure regulating valves, filters, indicating lights and audible alarms. Equipment check lists should be prepared for each of these groups of items. Isolating valves and pressure-regulating valves should be referred to by number in the check list and this number should correspond with that on the valve itself. It is usually convenient to arrange these check lists in such a manner that a record can be made against each valve etc., showing whether it has been "Examined", "Tested" or "Checked" in accordance with the P.M. programme.

Appendix I

Gases for pathology laboratories

Scope

1. The essential bench services usually include:

   Compressed air—required gauge pressures not above about 3 bar (40 p.s.i.)

   Rough vacuum at minus 400–500 mmHg (approximately equal to 16–20 inches Hg gauge)

2. Some of the following services may be required at individual benches in the sections shown, and typical rates of consumption are given. At the early stages of design it should be decided which of these should be piped and over what limited area. The local Fire Prevention Officer should be consulted if it is intended to use gases marked (a) from portable cylinders within the Department. Home Office approval will be necessary if acetylene is piped at a gauge pressure above 0·6 bar (9 p.s.i.).

Gas	*Sub-department using it*	*Typical total monthly consumption*	
		Imperial	*metric*
Oxygen (a)	Mechanised	1,500 ft³	45,000 litres
95% oxygen and 5% CO_2 mixture (a)	Mechanised, biochemistry, radio-isotopes	30 ft³	1,000 litres
Hydrogen (a)	Bacteriology	240 ft³	7,000 litres
Propane (a)	Mechanised, general biochemistry	40 ft³	1,200 litres
Acetylene (a)	Toxicology, general biochemistry	40 ft³	1,200 litres
Carbon dioxide	Histology, bacteriology, serology	35 lbs	15 kg
Nitrogen	Biochemistry	40 ft³	1,200 litres
Argon	Gas chromatography, toxicology	40 ft³	1,200 litres

Small quantities of other gases are used, including other mixtures of oxygen and carbon dioxide, and these can normally be supplied from portable cylinders.

Service mains for bench services—design and construction

3. The main piped distribution system is usually provided with tees at every bay, e.g. at 3·3m. (11 ft.) centres, in the areas likely to be used for laboratory work. The tees have plugged outlets where they are not required for immediate use. This arrangement is required to ensure flexibility in use of floor space in a department which is more subject to changes in techniques than most departments in the hospital service. Copper pipes and copper based alloys should not be used for acetylene services.

4. Changing techniques and the availability of natural gas are causing and will continue to cause changes in the requirements for the gases in the pathology laboratory. Although existing flame photometers are usually operated with oxygen, and either propane or butane, the newer ones operate on compressed air and natural gas. Existing flame photometers can usually be converted to burn natural gas and when this conversion has been completed they can usually be operated on compressed air and propane until natural gas becomes available. Atomic absorption spectrophotometers may operate with flames of air/acetylene, air/propane or nitrous oxide/acetylene; the actual flame required is dictated by the element to be determined.

5. The greatest possible care should be taken in the construction of the pipe system for miscellaneous gases for both the general and local bench services. Non-return valves may be required in the service to any item served by more than a single gas.

6. Terminal units (outlets) of the type used for medical gases, medical compressed air and medical vacuum should not be used in the pathology laboratory. Outlets for oxygen should terminate in non-ferrous valves, de-greased and suitable for oxygen use. Outlets for other gases and for compressed air should terminate in valves, and outlets for vacuum should terminate in suitable diaphragm valves or needle valves. All these outlets should have hand wheels suitable for identifying the gas by shape, as well as by an indestructible identification of the gas on the wheel itself (see B.S. 3202, Table 9).

7. A wash vessel must be installed at the bench position to remove acid vapours from any vacuum pipe line connected to an automatic analysing machine.

Fume cupboards, cabinets and hoods

8. Supplies will be required as follows:

Department and requirement	*Provision required*
Haematology	
Blood transfusion	
Sterile procedure cabinet for cell packing	Vacuum
Chemical pathology	
General Biochemistry	
Cabinet for preparation of faecal emulsions	Air, vacuum
Fume cupboard for chromatography preparation	Air, vacuum and nitrogen
Fume cupboard for spraying papers for chromatography	Air, vacuum
Hood for gas chromatography	Argon, air, hydrogen, nitrogen
Fume cupboard for toxicology	Air, vacuum

Identification of pathology laboratory gas pipe line services

9. The new editions of B.S. 1319 and 1710 will recommend that gas pipe lines for pathology laboratory services be identified by a terracotta (British Standard Colour 444) band and by the abbreviation "path". This identification will be used in combination with the other identifiers for the actual gas. An example of the use of this method of identification is given in Appendix 4.

Compressed air supplies

10. Compressed air is likely to be used for flame photometers, for drying purposes in some glassware washing machines, for driving small pumps and for minor drying and cleaning purposes. Compressor plant operating at a gauge pressure of about 3·5 bar (50 p.s.i.) is likely to be adequate for all laboratory requirements, provided it is fitted with a large air receiver which will enable it to meet the intermittent demand for large quantities of air without causing serious fluctuations in mains pressure. The air must be oil-free. Typical requirements are:

Equipment	*Gauge pressure required bar (p.s.i.)*	*Flow rate required at S.T.P. litres/minute*
Flame photometer	1·4 (20)	20
Glassware drying machine	2·8 (40)	85
De-ionizing plant	0·4 (6)	60

In addition, the following general scale of outlets is recommended:

Chemical pathology—chemical preparation bay—two outlets on wet preparation bench.

All other laboratories—one outlet per 12m. (40 ft.) bench length.

Workshops—one outlet.

11. The plant should comprise two sets each of full capacity, operating on a "duty" and "standby" basis with manual change-over. It is not essential to dry the air but an after-cooler fitted with an automatic trap and manual drain valve will reduce condensation in the distribution system to a minimum. An automatic trap and manual drain should also drain the air receiver. The main pipe runs should be laid to a fall and be fitted with drains and traps. Each trap should have a visible discharge into a gully. A dry type filter, capable of removing 95% of all particles of 5 micron size, and a silencer should be fitted on the compressor air intake. These filters will usually be located in the plant room because of the comparatively small capacity of the compressors. A flexible connection should be used to connect the compressor installation to the fixed distribution pipework so as to prevent the transmission of plant room noise along the pipe line. Individual filters and moisture traps should be fitted at outlets, where essential because of the type of apparatus to be connected. For the purpose of calculating compressor requirements the first general bench outlet should be assumed to require 80 litres/minute at S.T.P. and all other bench outlets 20 litres/minute. A pressure gauge and safety valve (discharging to a safe position) should be provided on the low pressure side of all reducing valves.

Rough vacuum

12. Rough vacuum is sufficient for most laboratory work, such as removing air and fluids from waxed tissue, evacuating anaerobic jars and filtering (for example through grade 5 sintered filters) as well as for transferring fluids from containers. The pathology laboratory system may entrain solvent gases and possibly acid vapours which might result in damage to conventional vacuum pumping plant. Water-sealed vacuum pumps having casings, impellers and air vessels designed to cope with these contaminants may be used, but all lubricated pumps may be unsuitable unless they are specially designed for laboratory vacuum work and can cope with the solvent gases and acid vapours. The laboratory authority should be consulted to ensure that no substance which might result in an explosion is likely to be drawn into the piped vacuum system. Portable or other vacuum plant such as water jet pumps should be used for evacuating such substances.

13. Drain traps, with isolating valves, should be provided on each bench spine connection. Bacterial filters should be fitted in parallel and preferably sited between the main sanitary traps in the plant room and the vacuum reservoir. The filters should have a penetration not exceeding 0·05% when tested by the sodium flame test in accordance with B.S. 3928.

14. The cold water mains supply should not normally be used to operate water jet vacuum pumps because of the need to conserve water and the risk of contaminating the water supply, and also because this contravenes most local water bye-laws. Water jet pumps may have to be used for evacuating substances which might cause explosion if drawn into the piped vacuum system and for substances which are excessively corrosive.

15. The central vacuum pumping plant should comprise two sets, each of full capacity, on a "duty" and "standby" basis, with a manual change-over. Each ordinary outlet should be capable of passing 30 litres/minute of free air when operating at a vacuum of 400 mmHg (16 in.) below a standard air pressure of 760 mmHg (30 in.). Throttles should be fitted to general service bench outlets to reduce the flow to 6 litres/minute (or in some cases 20 litres/minute) so as to limit the size of the vacuum plant required. For the purpose of assessing plant capacity the first vacuum outlet should be assumed to require 30 litres/minute and all other outlets 6 litres/minute of free air. The exhaust gases should be discharged outdoors, above roof level of the pump house and any buildings in the immediate vicinity, away from windows and other air intakes and positioned to avoid any ignition hazard which would be created if flammable mixtures were to be discharged.

16. The following scale of outlets is recommended:

Accommodation	*Scale*
Morbid anatomy	One outlet per 4·5m. (15 ft.) bench length.
Haematology and chemical pathology	One outlet per 9m. (30 ft.) bench length.
Microbiology and Public Health Laboratory Service	One outlet per 18m. (60 ft.) bench length.
Mechanised section	Two outlets.
Workshop	One outlet.

17. A very high vacuum service may be required for freeze drying equipment and this requirement would normally be met by portable high vacuum plant or by plant incorporated in the apparatus itself.

Gas cylinder management

18. The general principles outlined in the sections XIII "Accommodation for Medical Gases . . . ." and XIV "General Fire and Safety Precautions" (paragraphs 197, etc.) should be studied. Particular care is required in the storage and construction of pipework for hydrogen. The following is an extract from B.S. 3636: "If practicable, permanent piping should be provided to convey hydrogen to the test area with pipe fittings to B.S. 2051 ("Tube and pipe fittings for engineering purposes")."

Appendix 2

Dental department—piped vacuum installations

1. In modern dental surgeries water is used to cool high speed dental drills and it forms a spray which partially obscures the dental field and gathers in the floor of the patient's mouth. The operating field is kept clear of spray and water, and saliva, blood and debris is removed by a high-velocity, high-volume installation with lower volume accessories. The vacuum service is conventionally supplied by a local electrically-driven unit. This arrangement may be satisfactory for individual surgeries but it is far too noisy for a dental school or for multiple surgeries. Individual units pose the problems of disposal of the effluent, cleaning the equipment and the generation of smells. A pipe line system largely eliminates the noise and also deals with the other problems.

2. The main elements of a dental vacuum pipe line installation are indicated in the drawing.

3. A British Standards Institution committee is at present preparing a standard for the installation. The requirement is a flow into the high-flow suction cannula of 300 litres/minute. The vacuum level required to provide this flow appears to be of the order of 50–100 mmHg at the end of the induction tube. Pipe line plants at present providing this service are operated with pumps working in the range of the order of 180–250 mmHg (7 in.–10 in.) below atmospheric pressure. Equipment used in individual surgeries is commonly operated by household vacuum cleaner type pumps.

4. The systems are completely different from those required for medical vacuum because of the high-flow required to remove the mist. A much lower flow is required for removing material from the floor of the mouth and from the spittoon.

5. The fixed pipework installations differ greatly from the conventional medical vacuum installation since they include drainage to the sewer system, because fluids may be deposited in the vacuum pipe line owing to the low level of vacuum employed and because the separator does not eliminate all moisture.

6. The fixed vacuum pipe line will terminate in a union connector, probably of 19mm. ($\frac{3}{4}$ in.) or 25mm. (1 in.) size, controlled by a valve. This assembly may be floor- or wall-mounted as convenient.

7. The vacuum pipe line should be fitted with manually-operated drain cocks at all low points. Where individual separators are used in dental surgeries the drain lines may be discharged into a common drain line which terminates over an open tun-dish leading into a gully. The position chosen for the tun-dish should not be one which might give rise to complaints about possible odours. The discharge pipe should terminate at least 25mm. (1 in.) above the upper rim of any tun-dish or gully.

8. The fixed pipework should be flushed with a sterilizing fluid at intervals as required by the medical officer and the fluid should be collected in an interceptor tank.

9. Investigations are in progress so that guidance can be given on the diversity which may be expected in the use of piped vacuum in dental departments and dental schools.

10. If plastic pipes are to be used unplasticised P.V.C. pipes conforming to B.S. 3506 and 4514, with fittings conforming to B.S. 4346, will probably provide the most satisfactory and economical service for the vacuum pipe lines.

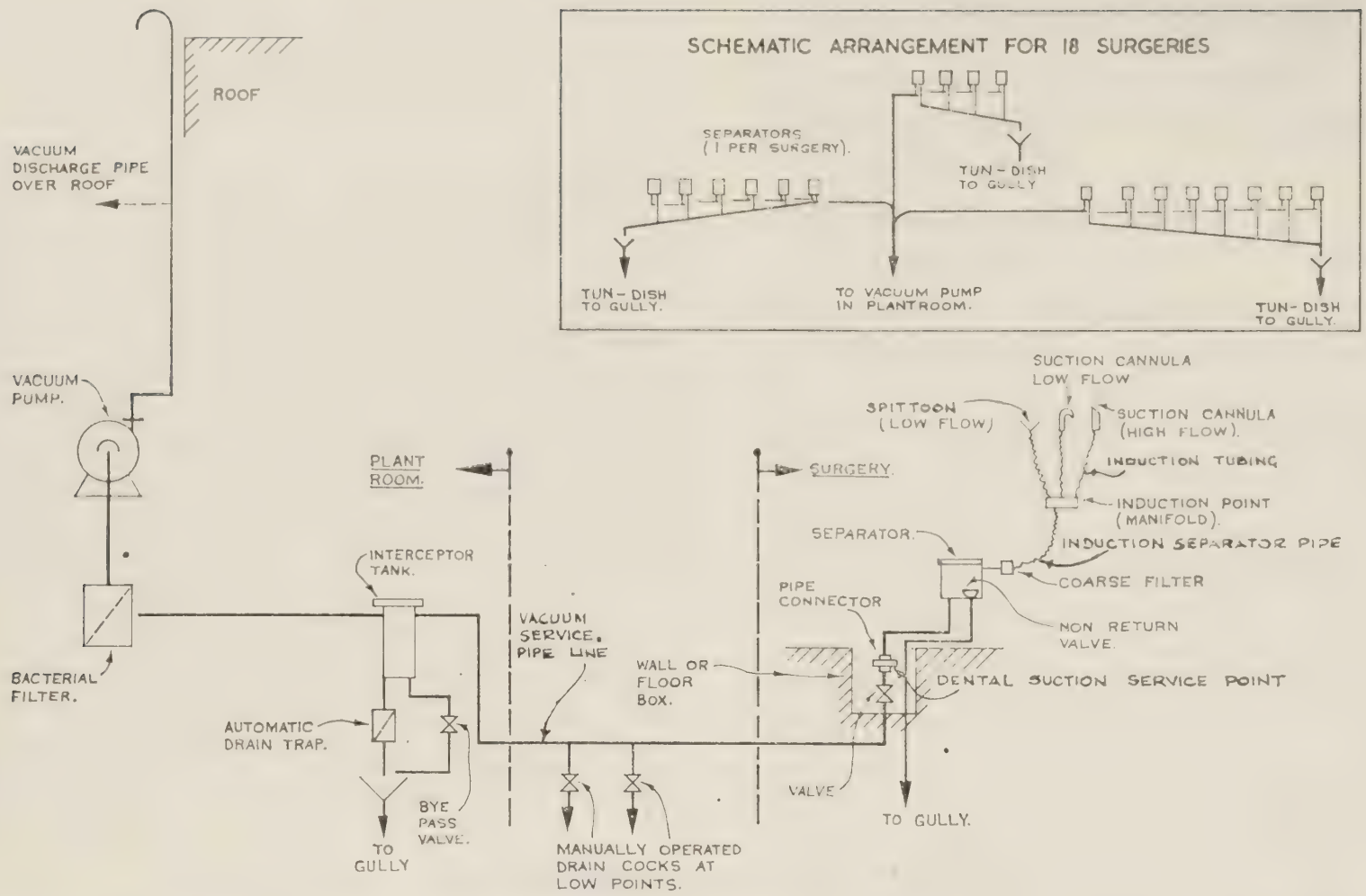

APPENDIX 2 **Elements of dental vacuum pipe line service**

NOTE

Spittoons are not necessarily connected to the vacuum system at all. They are often connected to the water supply and drainage system only.

Appendix 3

Medical gases compressed air and vacuum

Suggested scale of terminal units

Area	Number of terminal units				
	Oxygen	*Nitrous oxide*	*N_2O/O_2 mixture*	*Compressed air*	*Vacuum*
In-patient areas					
Single bedroom	1	—	—	—	1
High dependency areas	1 per 2 beds (*a*) (4 for 6 beds) (*a*)	—	—	—	1 per 2 beds (*a*) (4 for 6 beds) (*a*)
Intermediate care areas	2 for 6 beds (1 for 4 beds)	—	—	—	2 for 6 beds (1 for 4 beds)
Geriatric assessment	1 per single bedroom 1 per 2 beds (*a*) (3 for 5 beds) (*a*) (4 for 6 beds) (*a*)	— —	— —	— —	1 per single bedroom 1 per 2 beds (*a*) (3 for 5 beds) (*a*) (4 for 6 beds) (*a*)
Geriatric long stay	2 for 6 beds (1 for 4 beds)	—	—	—	2 for 6 beds (1 for 4 beds)
Ward treatment room	1	—	—	(*b*)	1
Coronary care unit or beds designated for coronary patient care	1 per bed	—	—	1 per bed	1 per bed (*c*)
Intensive therapy unit	1 per bed or cot etc. (*c*)	(*b*)	—	1 per bed	2 per bed
Short stay accommodation—general	1 per 2 beds (4 for 6 beds)	—	—	—	1 per 2 beds (4 for 6 beds)
District general hospital—Department of Psychiatry (Mental illness)					
Single bedrooms	1 (*d*)	—	—	—	1 (*d*)
Special single bedrooms	1 (*d*)	—	—	—	1 (*d*)
Non-cubiclised multi-bed room	1 (*e*)	—	—	—	1 (*e*)
Two of the annexe single bedrooms	1 (*f*)	—	—	—	1 (*f*)
Multi-bed room (Annexe)	1	—	—	—	1
E.C.T. treatment room	1	—	—	—	1
E.C.T. recovery ward	2 (*g*)	—	—	—	2 (*g*)
Room for abreaction, behaviour therapy etc.	1 (*h*)	—	—	—	1 (*h*)
Major operating suite					
Operating theatre	1 (*c*)	1 (*c*)	—	2	2 (*c*)
Anaesthetic room	1	1	—	1	1
Plaster room	1	1	—	2	1
Recovery area	1 per bed/trolley position	—	—	1 per bed/trolley position	1 per bed/trolley position
Minor operating suite	1	1	—	1	1
Maternity dept.					
Central delivery suite					
Dual purpose normal delivery	2	—	1	—	2
Paediatric resuscitation	1 per cot space	—	—	—	1 per cot space
High nursing dependency area	1 per two beds	—	—	—	1 per two beds
Recovery room	1 per bed space	—	—	—	1 per bed space
Theatre	2	1	—	—	3
Abnormal delivery	2	1	1	—	2
Anaesthetic room	1	1	—	—	1
Special baby care unit					
Nurseries	1 per cot/incubator	—	—	1 per ten cots/incubators (*j*)	1 per cot/incubator
Treatment room	2 per room	—	—	1 (*j*)	2 per room
Barrier nursing					
Normal delivery (Dual room)	2	1 (*j*)	1 (*j*)	—	2
Single rooms	1 per three rooms	—	—	—	1 per three rooms
Nursing area					
Single rooms	1 per three rooms	—	—	—	1 per three rooms
Nurseries	1 per nursery	—	—	—	1 per nursery

Appendix 3 (continued)

Area	Number of terminal units				
	Oxygen	*Nitrous oxide*	*N_2O/O_2 mixture*	*Compressed air*	*Vacuum*
Out-patient department					
Operating theatre	1 (*c*)	1 (*c*)	—	2	2 (*c*)
Anaesthetic room	1	1	—	1	1
Plaster room	1	1	—	2	1
Recovery area	1 per bed/trolley position	—	—	1 per bed/trolley position	1 per bed/trolley/position
Treatment room	2 per room (*k*)	—	—	—	2 per room (*k*)
Endoscopy room	1	1	—	—	2
Dental surgery	1	1	—	2	1 (*m*)
Major accident department					
Operating theatre	1 (*c*)	1 (*c*)	—	2	2 (*c*)
Anaesthetic room	1	1	—	1	1
Plaster room	1	1	—	2	1
Recovery area	1 per bed/trolley position	—	—	1 per bed/trolley position	1 per bed trolley position
Diagnostic x-ray department					
Operative radiography rooms, cardiography neurology	1 per operative room	1 per operative room	—	—	1 per operative room
Radiotherapy department					
Radiotherapy room } Preparation room }	As required for hyperbaric chambers, including terminal units *en route* as necessary from preparation room.	—	—	—	—

NOTES

(a) More terminal units may be required in some cases.
(b) As required by Medical Officer.
(c) Minimum.
(d) Per 30-bed ward.
(e) Located on the two-bed side.
(f) Four of the six single bedrooms in the annexe should have no terminal units.
(g) Area may be divided into male/female sections.
(h) Over bed-head.
(j) If practicable on economic grounds.
(k) One only required in a single place room.
(m) This is for medical purposes and should not be confused with the vacuum service required for removal of spray etc. from patient's mouth as described in Appendix 2.

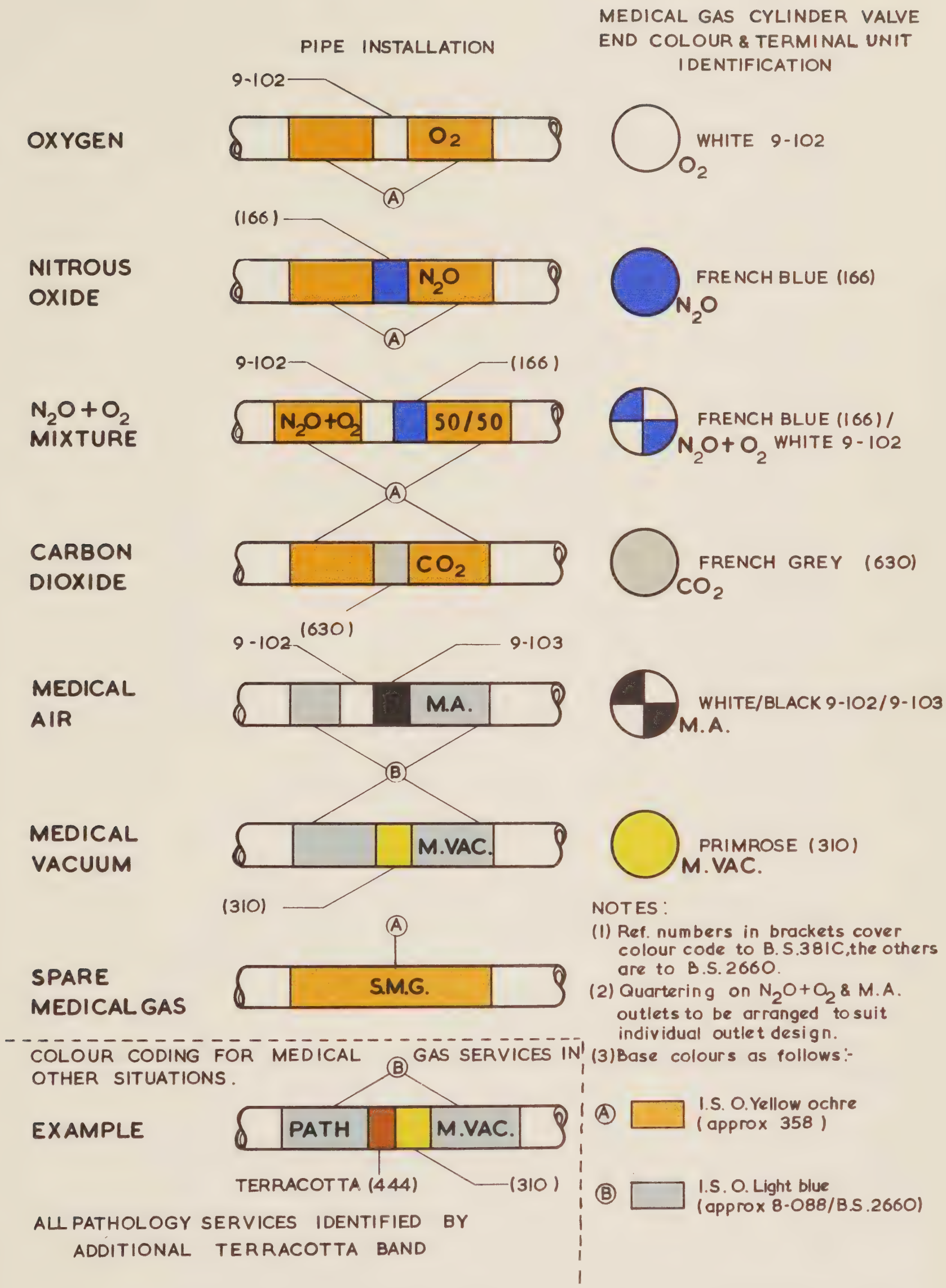

COLOUR CODE IDENTIFICATION FOR MEDICAL GAS TERMINAL UNITS AND PIPE INSTALLATIONS

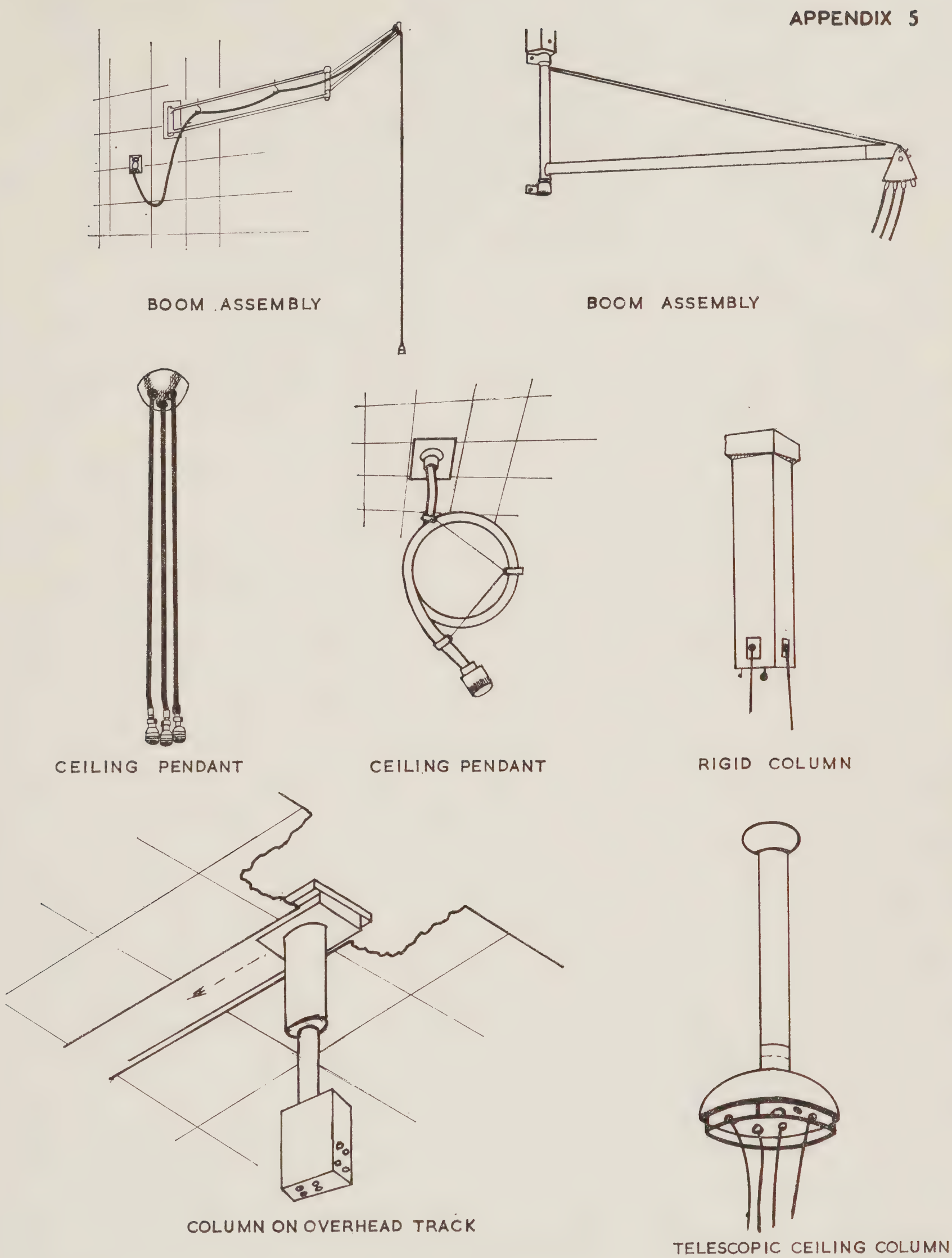

Special fittings for the supply of piped medical gases and vacuum in operating theatres

Appendix 6(a)

Oxygen

Nominal bed complement	Annual consumption of oxygen							
	Non-teaching hospitals				Teaching hospitals			
	Average		Maximum		Average		Maximum	
	1000 *ft.*³	1000 *m.*³	1000 *ft.*³	1000 *m.*³	1000 *ft.*³	1000 *m.*³	1000 *ft.*³	1000 *m.*³
100	50	1·4	350	9·9	230	6·5	240	6·8
200	150	4·2	720	20·4	400	11·3	570	16·1
300	240	6·8	1100	31·1	510	14·4	1020	28·9
400	340	9·6	1520	43·0	630	17·8	1600	45·3
500	440	12·5	1950	55·2	750	21·2	2300	65·1
600	530	15·0	2370	67·1	870	24·6	3100	87·8
700	620	17·6	2800	79·3	990	28·0	4050	114·7
800	710	20·1	3240	91·7	1120	31·7	—	—
900	810	22·9	3700	104·8	1260	35·7	—	—
1000	920	26·1	4200	118·9	1400	39·6	—	—
1100	1030	29·2	—	—	1540	43·6	—	—
1200	1140	32·3	—	—	1680	47·6	—	—

The "maximum" figures quoted are those which are not expected to be exceeded by more than 2½% of all hospitals of the two types.

The figures are based on the actual consumption of piped oxygen in 84 non-teaching hospitals (including 39 acute and 18 mainly acute) and 26 teaching hospitals (including 17 acute) in 1966/67. It excludes all supplies in small cylinders. No hospital using a hyperbaric chamber was included in this survey.

Appendix 6(b)

Nitrous oxide

Nominal bed complement	Annual consumption of nitrous oxide											
	Type "A" hospitals				Type "B" hospitals				Type "C" hospitals			
	Average		Maximum		Average		Maximum		Average		Maximum	
	1000 gals.	m³	1000 gals.	m³	1000 gals.	m³	1000 gals.	m³	1000 gals.	m³	1000gals.	m³
100	—	—	658	2990	117	530	440	2000	129	590	430	1950
200	188	850	862	3920	185	840	508	2310	158	720	459	2090
300	391	1780	1065	4840	252	1150	575	2610	186	850	487	2210
400	595	2700	1269	5770	320	1450	643	2920	215	980	516	2350
500	799	3630	1473	6700	387	1760	710	3230	243	1100	544	2470
600	1003	4560	1677	7620	454	2060	777	3530	271	1230	572	2600
700	1207	5490	1881	8550	522	2370	845	3840	300	1360	601	2730
800	1410	6410	2084	9470	589	2680	912	4150	328	1490	629	2860
900	1614	7330	2288	10400	657	2990	980	4460	357	1620	658	2990
1000	1818	8260	2492	11320	724	3290	1047	4760	385	1750	686	3120
1100	2022	9190	2696	12260	791	3600	1114	5060	413	1880	714	3250
1200	2226	10120	2900	13180	859	3910	1182	5370	442	2010	743	3380

Annual consumptions of nitrous oxide in various types of hospitals.
Type "A" Acute teaching and "other" teaching.
Type "B" Acute; maternity; maternity teaching; tuberculosis and chest; children's acute and "other".
Type "C" Mainly acute; mainly acute teaching; partly acute and orthopaedic.
Classification as for the hospital costing returns.
The "maximum" figures quoted are those which should not be exceeded by more than 2½% of all hospitals.
Figures below dotted lines have been obtained by extrapolation.
Based on equations given by Carson, W. Consumption of nitrous oxide in hospitals, "The Hospital Engineer," Vol. XXII. No. 3, March 1968 pp. 53–56.

Appendix 7

Surgical tools

Manufacturer	*Agent*	*Tool*	*Line Operating Pressure*		*Maximum Flow Rate Litres/ Minute*
			P.S.I.G.	*Bars*	
Desoutter Bros. Ltd.	—	P/G Bone Saw Drill M8B	70–100	4·8–6·9	200
Desoutter Bros. Ltd.	—	Osteotomy Saw M100	70–100	4·8–6·9	200
Desoutter Bros. Ltd.	—	Oscillating Bone Saw SA71	70–100	4·8–6·9	310
Down Bros. and Mayer & Phelps	—	Lung & Liver Biopsy Drill (Desoutter Motor M68)	30–90	2·1–6·2	140
Down Bros. and Mayer & Phelps	—	Lung & Liver Biopsy Drill (Desoutter Motor M99)	30–90	2·1–6·2	200
Hall International Inc. U.S.A.	Down Bros. and Mayer & Phelps	Air Drill 100	90–110	6·2–7·6	170
(Hall Surgical SA Zurich)	Down Bros. and Mayer & Phelps	Air Driver 20	100	6·9	280
(Hall Surgical SA Zurich)	Down Bros. and Mayer & Phelps	Craniotome	100	6·9	280
Howmedica International Germany	Howmedica (U.K.) Ltd.	Universal Air Instruments	73–88	5·1–6·1	180
Stryker U.S.A.	Down Bros. and Mayer & Phelps	Pneumatic Bone Saw 1400 Series	80–125	5·5–8·6	340–425
Stryker U.S.A.	Down Bros. and Mayer & Phelps	Micro equipment 1600 Series	60–80	4·1–5·5	43–57
Zimmer Orthopaedic Ltd.	—	Straight Air Drill	85	5·9	184
Zimmer Orthopaedic Ltd.	—	Right Angled Air Unit	85	5·9	184
Zimmer Orthopaedic Ltd.	—	Osteotomy Saw	85	5·9	184
Zimmer Orthopaedic Ltd.	—	Oscillatory Saw	85	5·9	184
Zimmer Orthopaedic Ltd.	—	Allen Powell Air Turbine	110	7·6	100
		Patient Ventilators			
Air-Shields Incorp. U.S.A.	Air-Shields (U.K.) Ltd.	Ventimeter Ventilator	30–35	2·1–2·4	65
Bird Corporation U.S.A.	British Oxygen Co. Ltd.	Bird Ventilator	45–80	3·1–5·5	80
Blease Medical Equip Ltd..	—	Aerosol Attachment Bird Cat. No. 1008	15–60	1–4·1	negligible
Blease Medical Equip. Ltd.	—	Manley Ventilator MP2 and MN2	3–10	0·2–0·7	18
Blease Medical Equip. Ltd.	—	"Brompton" Manley Ventilator BM2	5–10	0·3–0·7	18
Blease Medical Equip. Ltd.	—	Paediatric Open Circuit Ventilator	Via Flowmeter	—	15
British Oxygen Co. Ltd.	—	Harlow Ventilator	60	4·1	70
Cape Engineering Co. Ltd.	—	Autoflator	0·5–60	0·03–4·1	100
Draegerwerk Germany	Draeger Medical Ltd.	Aspirators M1171 and M11760	60–100	4·1–6·9	28
Draegerwerk Germany	Draeger Medical Ltd.	Aspirator Injector M12832	36–142	2·5–9·8	28
Draegerwerk Germany	Draeger Medical Ltd.	Assistor	28–142	1·9–9·8	42
Draegerwerk Germany	Draeger Medical Ltd.	Baby Pulmotor (Peters)	60–100	4·1–6·9	20
Draegerwerk Germany	Draeger Medical Ltd.	Poliomat	60–100	4·1–6·9	42
Draegerwerk Germany	Draeger Medical Ltd.	Pulmomat	60–100	4·1–6·9	57
H. G. East & Co. Ltd.	—	East-Freeman Patient Triggered Ventilator Mk. II	3	0·2	100
H. G. East & Co. Ltd.	—	Sheffield Infant Ventilator	1	0·07	20
H. G. East & Co. Ltd.	—	East-Freeman "Automatic Vent"	1	0·07	30
Electronic Pneumatic Automation Ltd.	—	Minepac Emergency Fluid Logic Ventilator	58–150	4–10·3	45
Electronic Pneumatic Automation Ltd.	—	Babepac Infant resuscitator	58–150	4–10·3	18
Electronic Pneumatic Automation Ltd.	—	Epac Minor Anaesthetic Ventilator	58–150	4–10·3	45
Electronic Pneumatic Automation Ltd.	—	Resuscepac resuscitators (a)	75–150	5·2–10·3	45
Electronic Pneumatic Automation Ltd.	—	Epac Midwifery Set Infant Resuscitator	58–150	4–10·3	18
Puritan Bennett Corp. U.S.A.	Vickers Ltd.	Bennett Ventilators BA4, PR1, PR2, MA1B, TV2P, TV4, PV3P	40– 70	2·8–4·8	100
Philips Medical Systems Ltd.	—	Barnet Ventilator Mk. I, II and III	3–100	0·2–6·9	35
Philips Medical Systems Ltd.	—	Howells Ventilator	3–100	0·2–6·9	35

(a) This information also applies to their "Lifepac", Epac Standard Portable and the Epac Lightweight Portable Resuscitators

Appendix 7 (continued)

Dental equipment

Manufacturer	*Agent*	*Equipment*	*Line Operating Pressure*		*Maximum Flow Rate Litres/ Minute*
			P.S.I.G.	*Bars*	
		(A) Air Bearing High Speed Turbine Handpieces			
A.D. International Ltd.	Amalgamated Dental Trade Distributors Ltd.	Ash Air Bearing Handpiece	55–60	3·8–4·1	34
Aldo Castellini	Castellini Dental Equipment Ltd.	Air-Only Handpiece	55–60	3·8–4·1	37
Dental Manufacturing Co.	—	Wispair Air Bearing Turbine	45–70	3·1–4·8	37
Encore Power Div. Inc.	Cottrell & Co.	Orbit Air Bearing Handpiece	50 (min)	3·4	40
Kaltenbach and Voigt	Kavo Dental Ltd.	All-Air Air Bearing Handpiece	55–65	3·8–4·5	57
Micro Turbines Ltd.	Glover Dental Supplies	Silentair Air Bearing Handpiece (b)	55–100	4·1–4·5	50 (a)
J. Morita Dental Mfg. Coy.	F. H. Wright Mfg. Co. Ltd.	Astron Air Bearing Handpiece	50	3·4	34
Siemens	Sierex (Dental) Ltd.	All-Air Air Bearing Turbine	54	3·7	35
Siemens	Sierex (Dental) Ltd.	S.L. Air Turbine	54	3·7	35
		(B) Ball Bearing High Speed Turbine Handpieces			
Aldo Castellini	Castellini Dental Equipment Ltd.	G.R. Handpiece	55–60	3·8–4·1	40
Bien-Air (Neuchatel)	F. H. Wright Dental Mfg. Co. Ltd.	Model A-Lux Dental Turbine	45	3·1	30
Dental Manufacturing Co.		Rotovac (b)	40	2·8	28
Dental Manufacturing Co.		Alston (b)	40	2·8	28
Kaltenbach and Voigt	Kavo Dental Ltd.	Borden Airotor Ball Bearing Turbine	45–50	3·1–3·4	37
J. Morita Dental Mfg. Coy.	F. H. Wright Dental Mfg. Co. Ltd.	Air Jet Mk III	43	2·96	34
Siemens	Sierex (Dental) Ltd	Sirona Ball Race Turbine	36	2·5	31
Sandri	J. & S. Davis Ltd.	Sandri Air Turbine Handpiece	50	3·4	42
Star Dental Mfg. Co. Inc.	Courtin Ltd.	Starflite Concentrix Handpiece	45–65	3·1–4·5	62
Star Dental Mfg. Co. Inc.	Courtin Ltd.	Starflite Futura Handpiece	25–35	1·7–2·4	62
		(C) Low Speed Air Motors			
A.D. International Ltd.	Amalgamated Dental Trade Distributcrs Ltd.	Ash High Torque Motor	55	3·8	37
Atlas Copco	Down Bros and Mayer &. Phelps Ltd.	Dental Air Drill	35	2·4	57
Dental Manufacturing Co.	—	Sylvestair	30–70	2·1–4·8	37
Kaltenbach and Voigt	Kavo Dental Ltd.	Dentatus Air Motor	45	2·4–3·1	47
J. Morita Dental Mfg. Coy.	F. H. Wright Dental Mfg. Co. Ltd.	Air Motor Handpiece	46	3·2	72
Ritter Co.	L. Porro	Torqmaster	30–45	2·1–3·1	47
Sandri	J. & S. Davis Ltd.	Air Motor	50	3·4	42
Svedia	W. P. Constable	Cyclone Dental Motor	57	3·9	80
Svedia	W. P. Constable	Cyclone Intra	57	3·9	80
Svedia	W. P. Constable	Cyclone Standard Model	45–110	3·1–7·6	51–119
		(D) Electric Micro Motors with compressed air cooling			
Siemens	Sierex (Dental) Ltd.	Sirona Motor	26–35	1·8–2·5	27

(a) Approx.

(b) Not in current production but is still serviced

NOTE 1 A very wide variety of dental units is available. These incorporate one or more of the items listed above and, usually, a multi-syringe which requires a quantity of compressed air, typically less than about 7 litres/min which may be used simultaneously with the handpiece. Similarly small quantities are used for cooling the handpiece burr on most electrically driven micromotors.

NOTE 2 The pressures quoted in the dental equipment tables are those required under the *running* condition at the instrument, not the static pressure at the terminal unit. Allowance must be made, in addition, for pressure losses in the dental equipment control system which might, typically, be 0·4 bar (5·8 p.s.i.) on a simple unit, and rise to 1 bar (14·5 p.s.i.) on a more elaborate unit.

Appendix 8

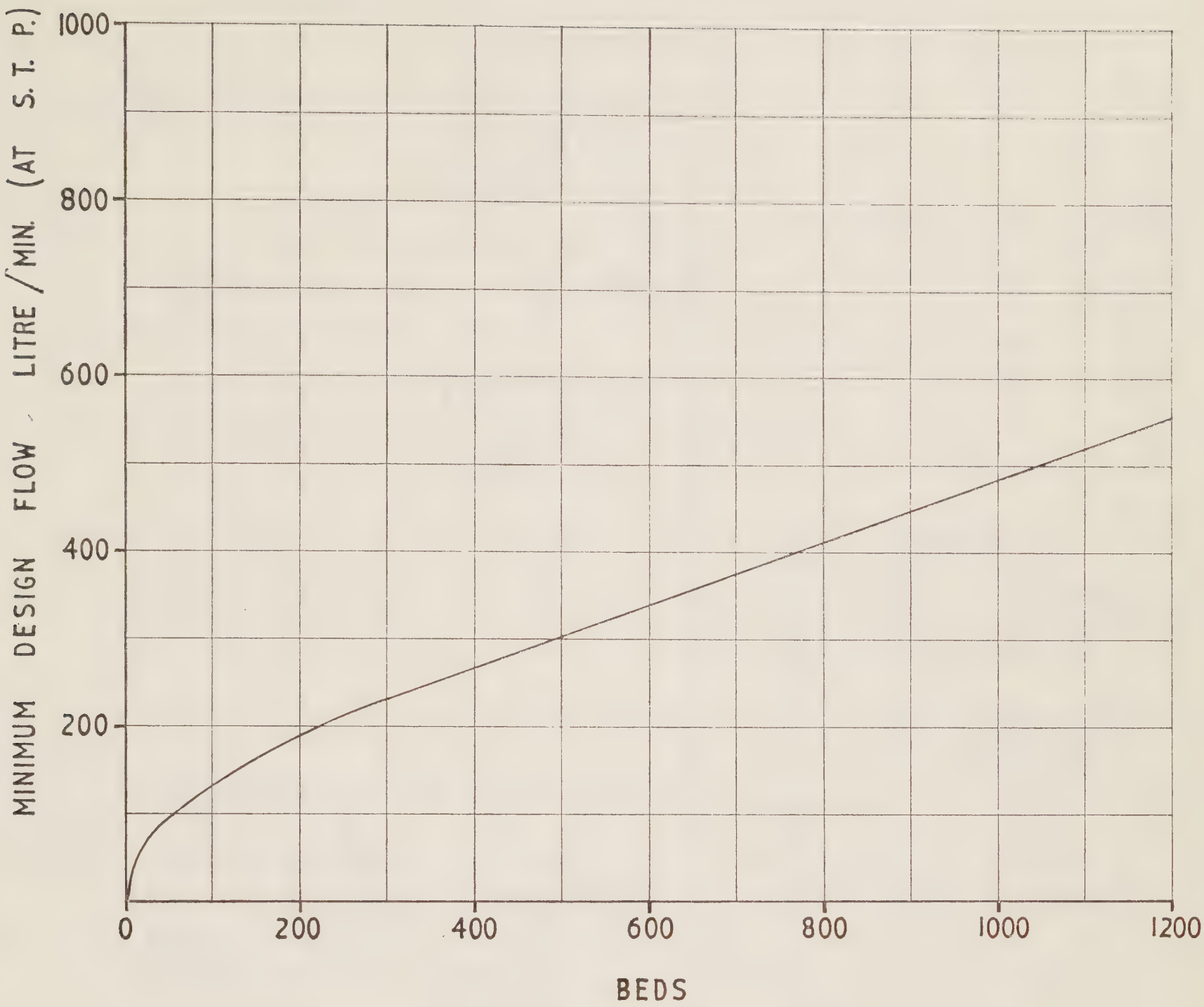

Minimum total design flow for oxygen, for general wards only

Appendix 9

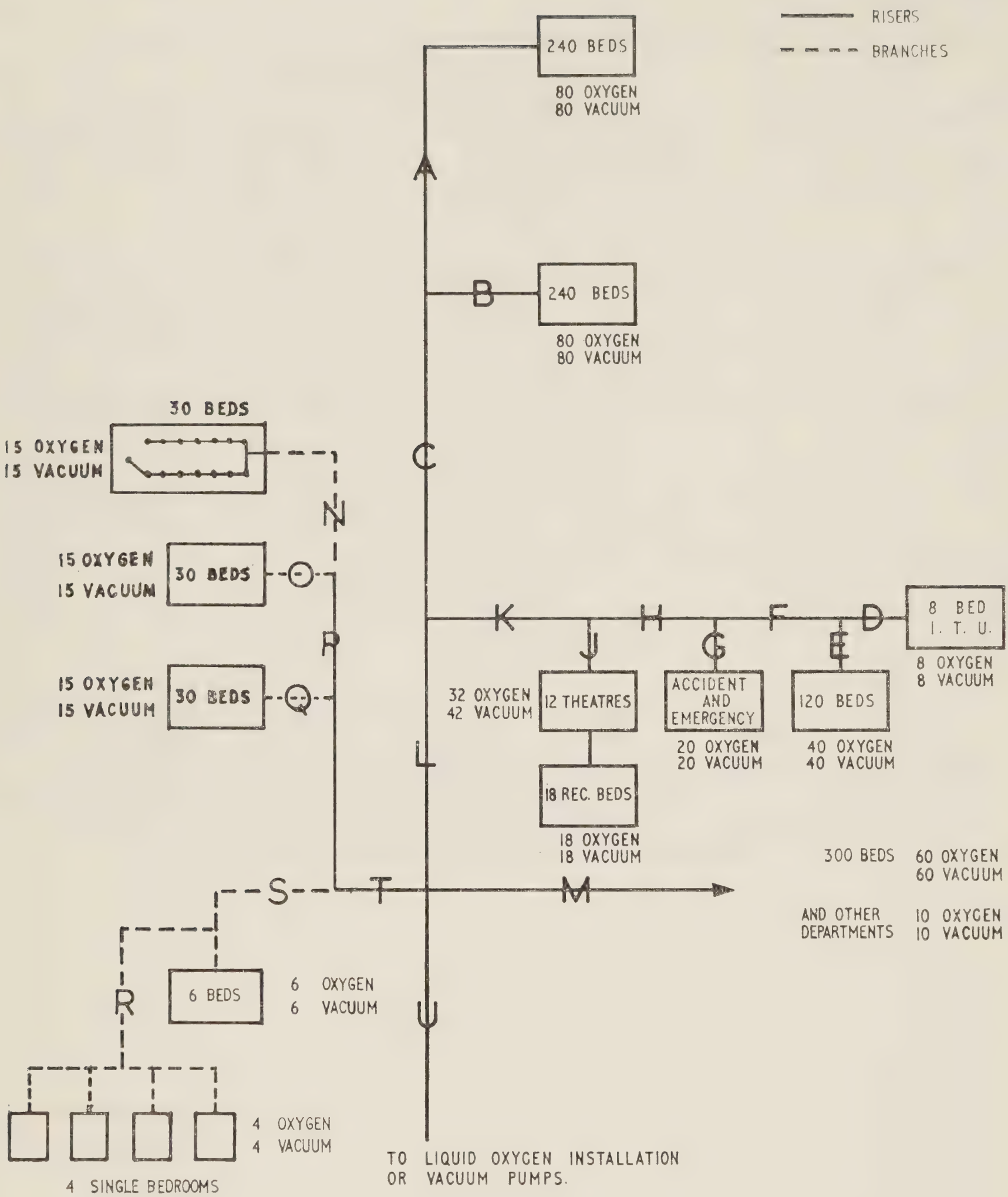

Typical arrangement for oxygen and vacuum risers or distributors
(for flow calculations see Appendices 10 and 12)

Appendix 10

Calculation of flow in main oxygen risers and distributors as in Appendix 9

(See paragraph 38)

Pipe line section	*Area served*	*Refs. to H.T.M. No. 22*		*Calculations*	*Litres per minute at S.T.P.*
		Para.	*Appendix or sub-para.*		
A	240 beds	38	App. 8		210
B	240 beds	38	App. 8		210
C	480 beds	38	App. 8		295
D	Intensive therapy unit, 8 beds	36		Air is used to drive patient ventilators therefore 8 × 20	160
E	120 beds	38	App. 8		140
F	D + E				300
G	Accident and emergency dept. 20 terminal units			No theatre $20 + (\frac{19}{4} \times 6)$ 48·5	48
H	F + G				348
J	Theatre suites			Air is used to drive patient ventilators	
	First and second suites	34		50 + 30 = 80	
	Remaining 10 suites	34		10 × 20 = 200	
	One plaster room	34		20	
	18 recovery beds	35		8 × 20 = 160	
				10 × 20 × 45% = 90	550
K	H + J				898
L	600 beds + D + G + J	38	App. 8	340 160 + 48 + 550 = 758	1098
M	300 beds + 10 terminal units in depts.	38 37	App. 8 (ii)	230 $20 + (\frac{9}{4} \times 6)$ 33·5	263
N	30 beds (15 terminal units)	37	(ii)	$20 + (\frac{14}{4} \times 6)$ = 41	41
O	30 beds (15 terminal units)	37	(ii)	As for N	41
P	60 beds	38	App. 8		110
Q	30 beds (15 terminal units)	37	(ii)	As for N	41
R	Four single-bed rooms	37	(ii)	$20 + (\frac{3}{4} \times 6)$ 24·5	24
S	Six-bed ward + four single-bed rooms	37	(ii)	$20 + (\frac{9}{4} \times 6)$ 33·5	33
T	100 beds	38	App. 8		130
U	1000 beds + D + G + J + terminal units in M	38	App. 8	480 160 + 48 + 550 758 33·5	1271

Appendix II

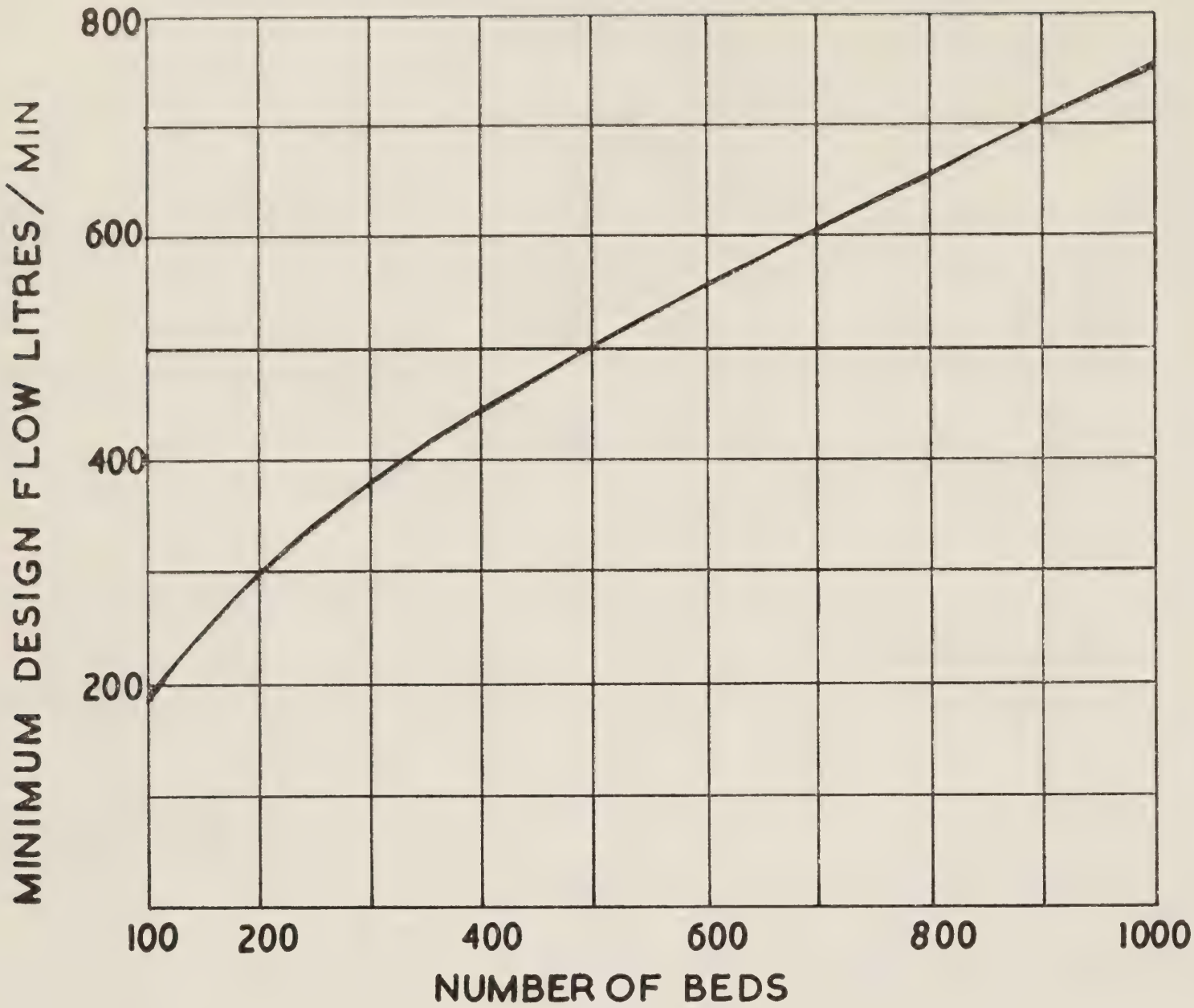

Minimum design flow for general wards in supply areas of 100 to 1,000 beds
(excludes flow required for operating suites, recovery wards, intensive therapy unit or area)

Appendix 12

Calculation of flow in main vacuum risers and distributors as in Appendix 9

(See paragraph 49)

Pipe line section	*Area served*	*Refs. to H.T.M. No. 22*		*Calculations*		*Litres per minute free air*
		Para.	*Appendix or sub-para.*			
A	240 beds	49	App. 11			340
B	240 beds	49	App. 11			340
C	480 beds	49	App. 11			480
D	Intensive therapy unit, 8 beds	44		8 × 20		160
E	120 beds	49	App. 11			215
F	D + E					375
G	Accident and emergency dept., 20 terminal units	48		20 × 20 × 25%		100
H	F + G					475
J	Theatre suite					
	12 theatres	44		8 × 80	640	
		46		4 × 80 × 60%	192	
	12 anaesthetic rooms	44		8 × 40	320	
		46		4 × 40 × 60%	96	
	18 recovery ward beds	44		8 × 40	320	
		46		10 × 40 × 45%	180	1748
K	H + J					2223
L	600 beds	49	App. 11		560	
	+ D + G + J			160 + 100 + 1748	2008	2568
M	300 beds	49	App. 11		380	
	+ 10 terminal units in depts.	48		10 × 20 × 25%	50	430
N	30 beds	47	(ii)	6 beds	40	
				24 beds × 2·5	60	100
O	30 beds	47	(ii)	As for N		100
P	60 beds	49	App. 11	Minimum		180
Q	30 beds	47	(ii)	As for N		100
R	Four single-bed rooms	47	(iii)	Medical advice for this hospital only		45
S	Six-bed ward + four single-bed rooms	47	(ii)	40 + (4 beds × 3·5)		54
T	100 beds	49	App. 11	Minimum		180
U	1000 beds	49	App. 11	Minimum	750	
	+ D + G + J	49		160 + 100 + 1748	2008	
	+ terminal units in depts. at M				50	2808
	NOTE Minimum free air capacity of each vacuum pump if two pumps are used			2808 × 75%		2106

Appendix 13

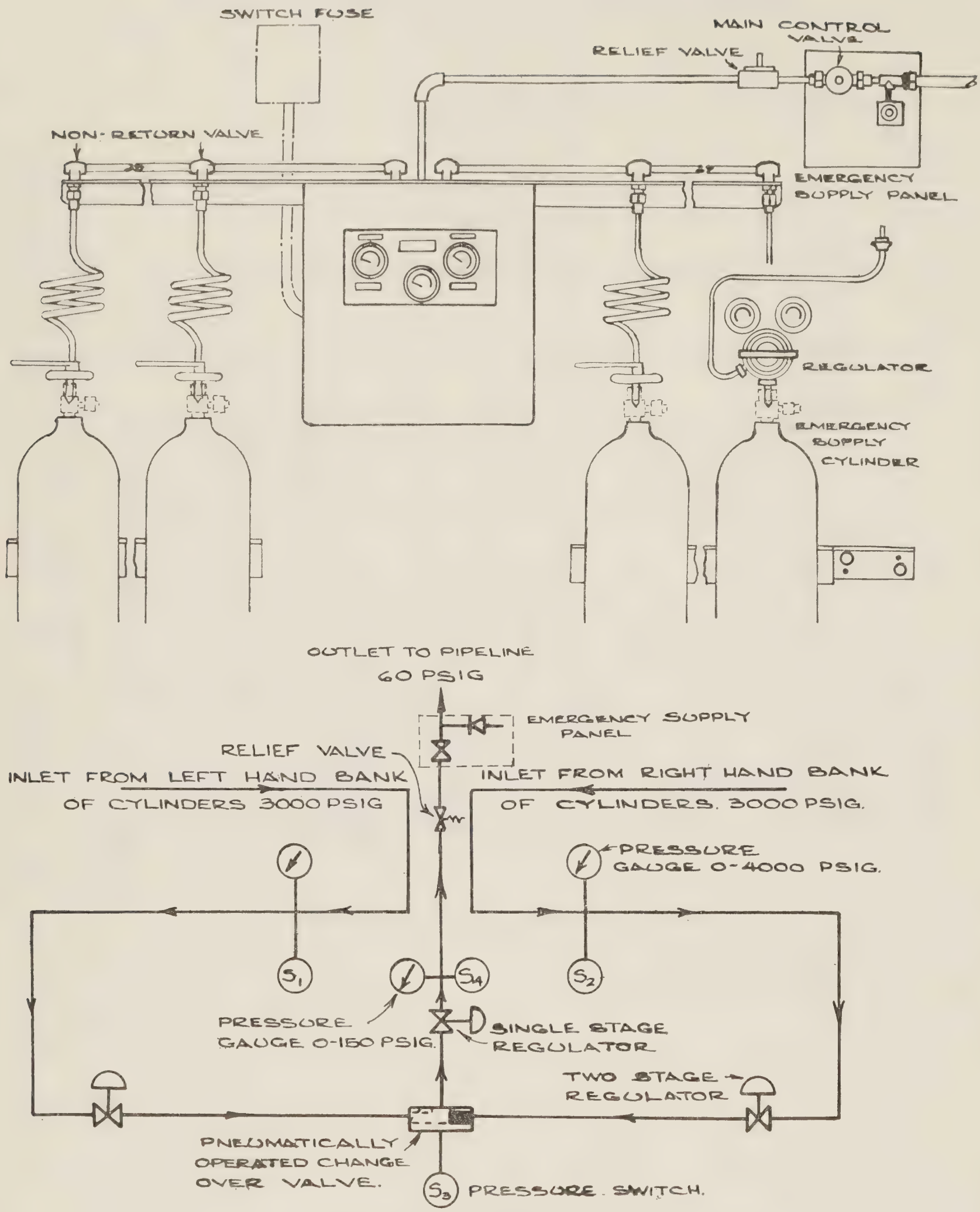

Typical automatic manifold arrangement

Appendix 14

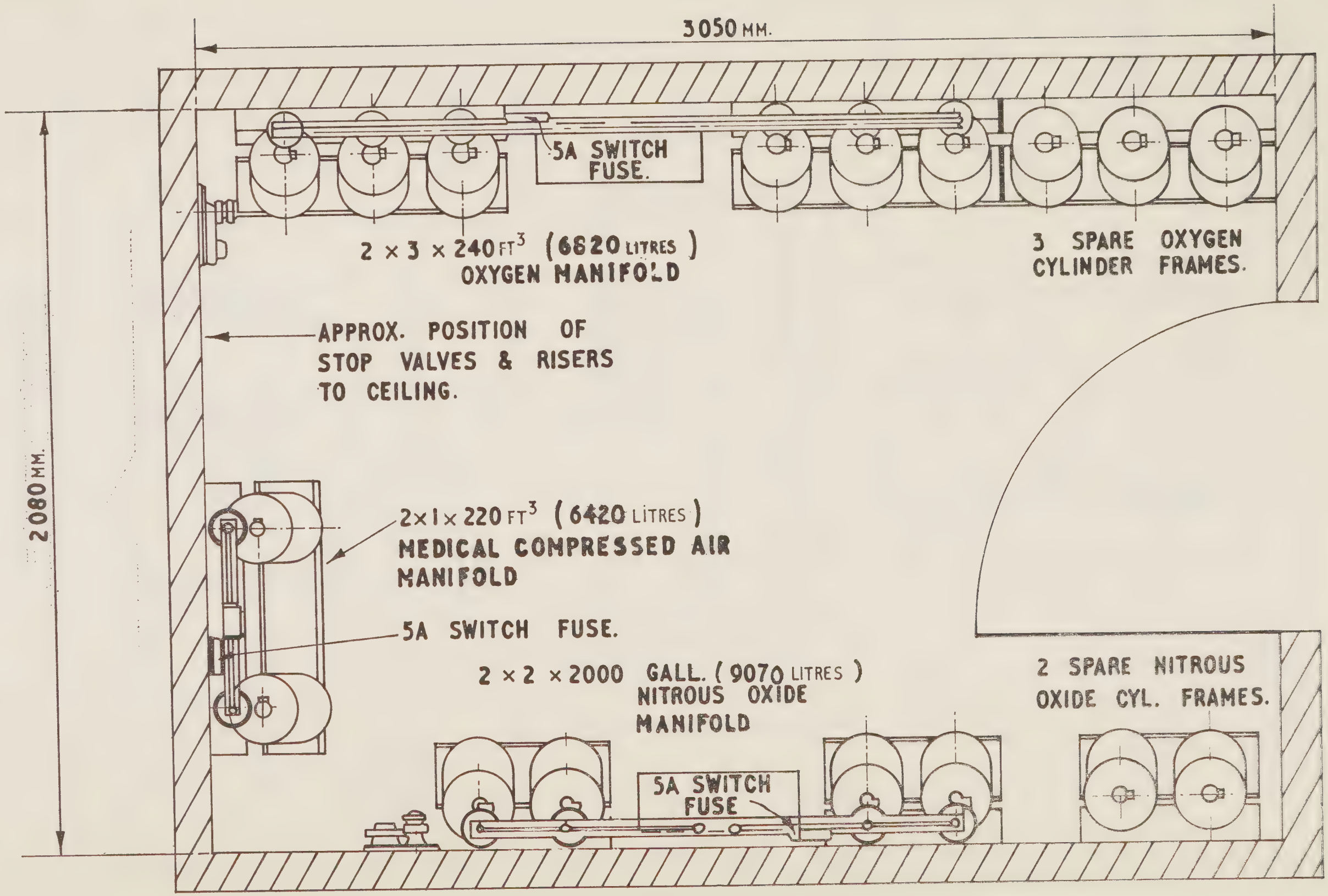

Typical layout of manifold room for a small hospital

Appendix 15

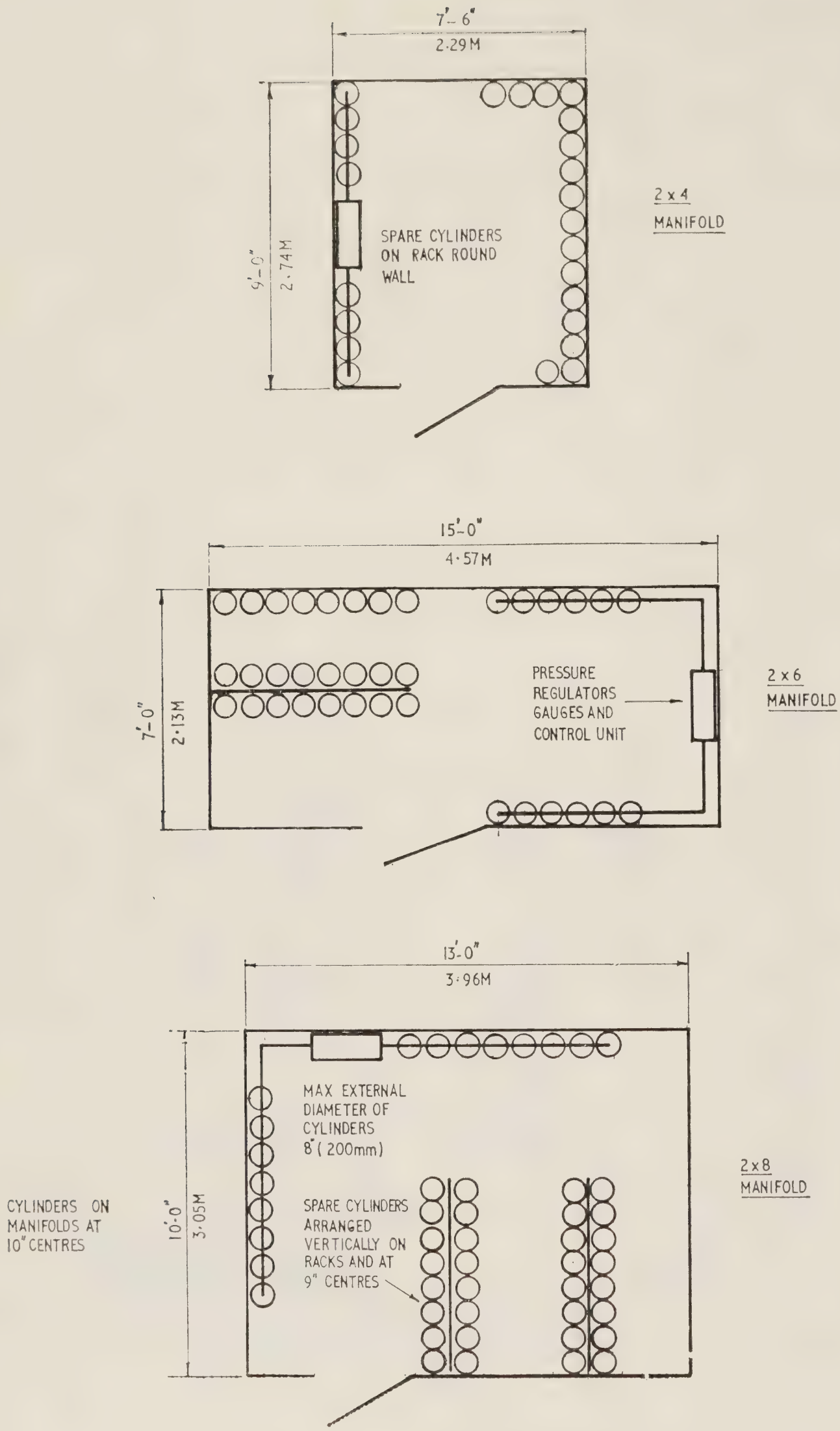

Typical arrangement of combined manifold and gas cylinder storage rooms

Appendix 16

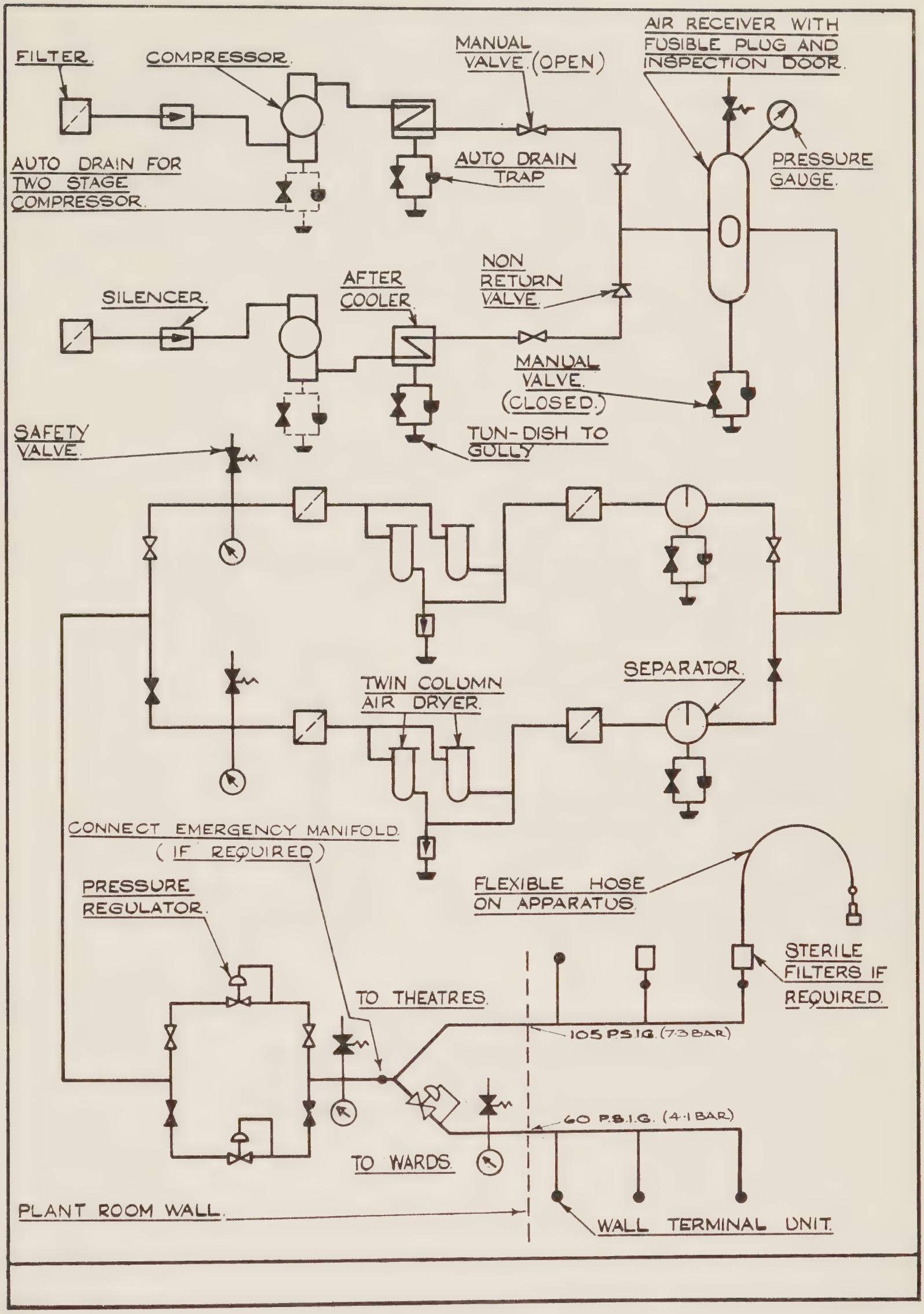

Piped medical compressed air installation

Appendix 17

F.A.D. 105 PSIG *c.f.m.*	F.A.D. 7.3 BAR *litres*	LENGTH 'A' MINIMUM *Imperial*	LENGTH 'A' MINIMUM *metric*	LENGTH 'B' MINIMUM *Imperial*	LENGTH 'B' MINIMUM *metric*	ROOM HEIGHT MINIMUM *Imperial*	ROOM HEIGHT MINIMUM *metric*
6·5	180	12 ft. 6 in.	3·8m.	12 ft. 0 in.	3·7m.	8 ft. 0 in.	2·4m.
50·5	1,400	15 ft. 6 in.	4·7m.	16 ft. 0 in.	4·9m.	10 ft. 7 in.	3·2m.
134·0	3,800	18 ft. 9 in.	5·7m.	19 ft. 6 in.	5·9m.	12 ft. 6 in.	3·8m.

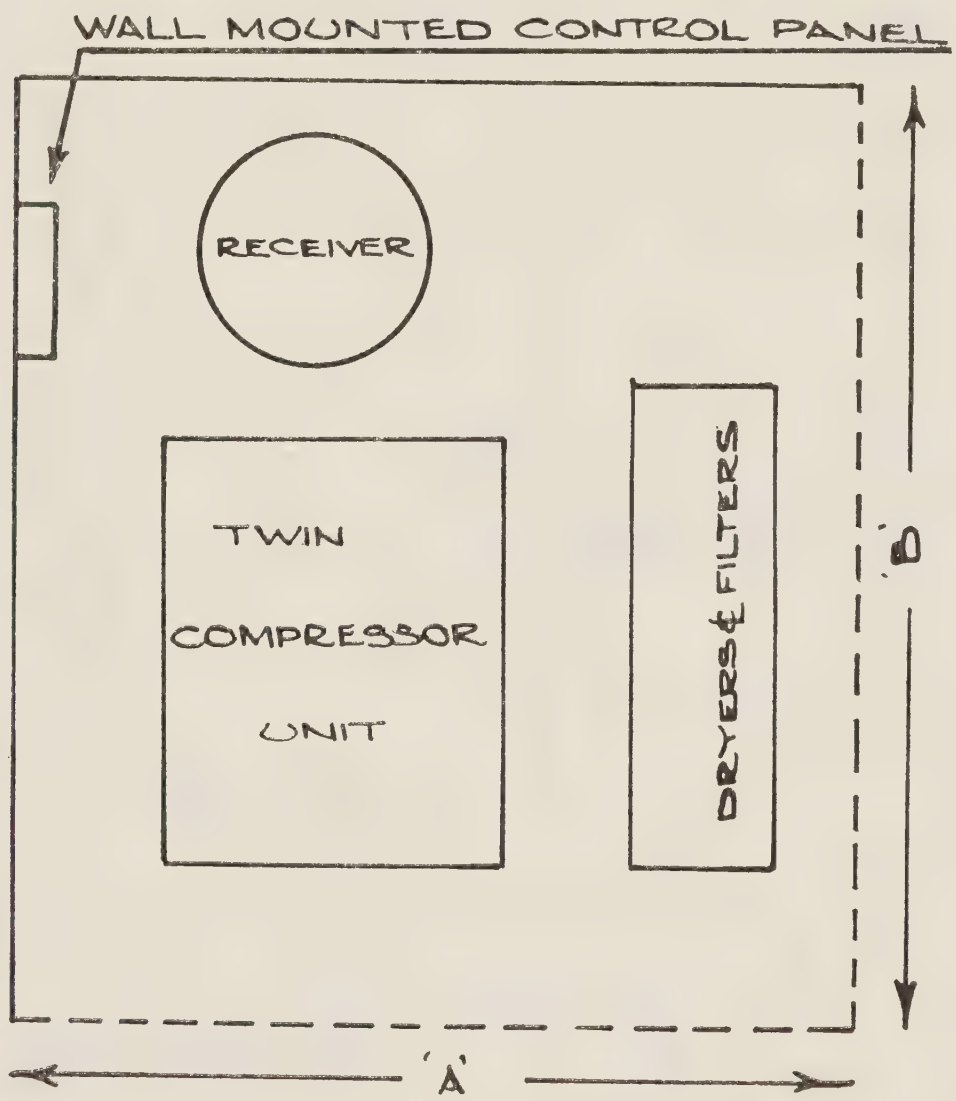

Typical plan of medical air compressor plant room

Appendix 18

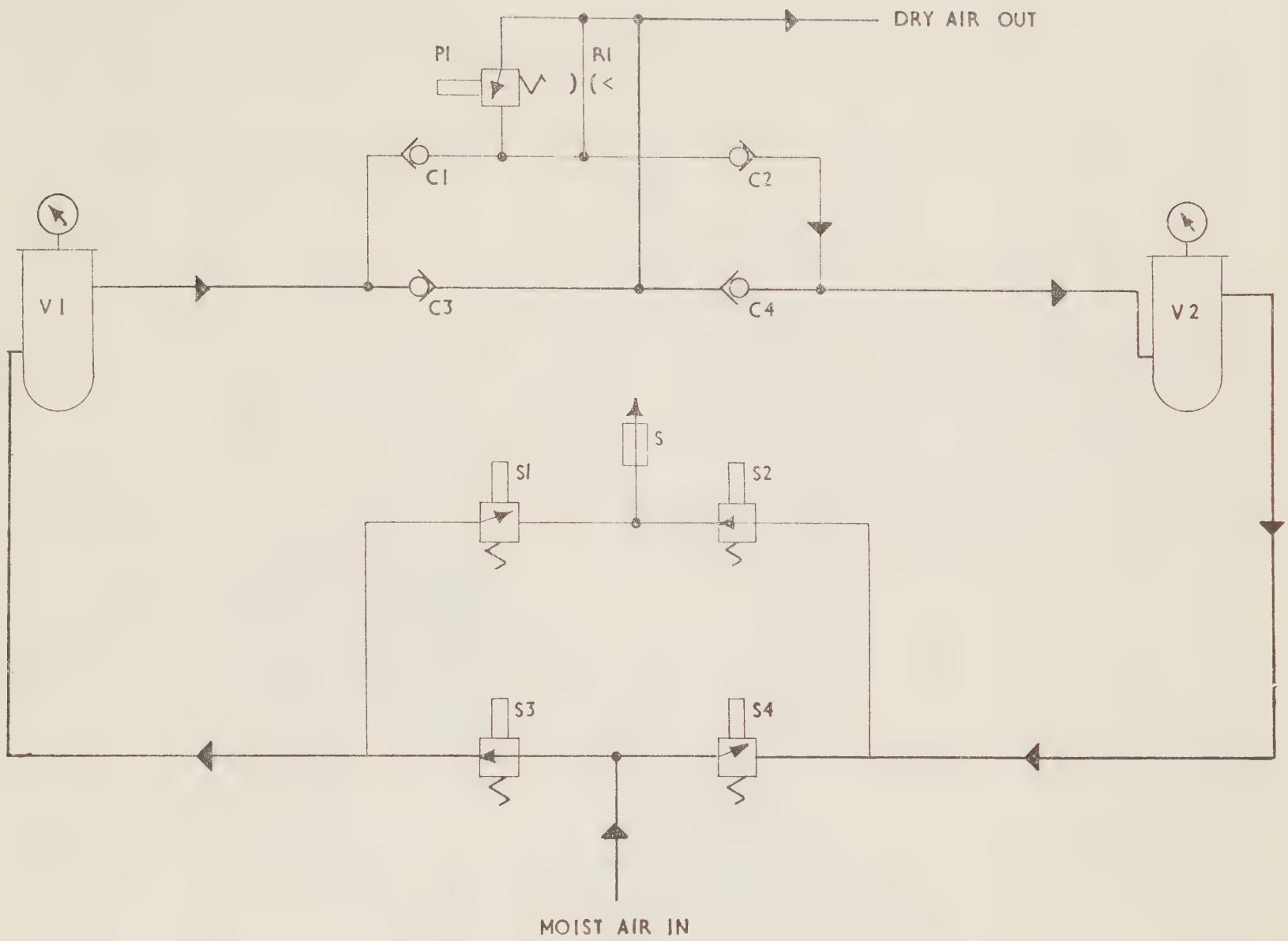

V1 Vessel drying
V2 Vessel reactivating
S1 S2 S3 S4 Solenoid valves for controlling air entry and purging
C1 C2 C3 C4 Check valves controlling dry air exit and purge air supply
R1 Regulator for air purge
P1 Pressurisation solenoid valve
S Purge air outlet silencer

Typical arrangement of a desiccant air dryer

Appendix 19

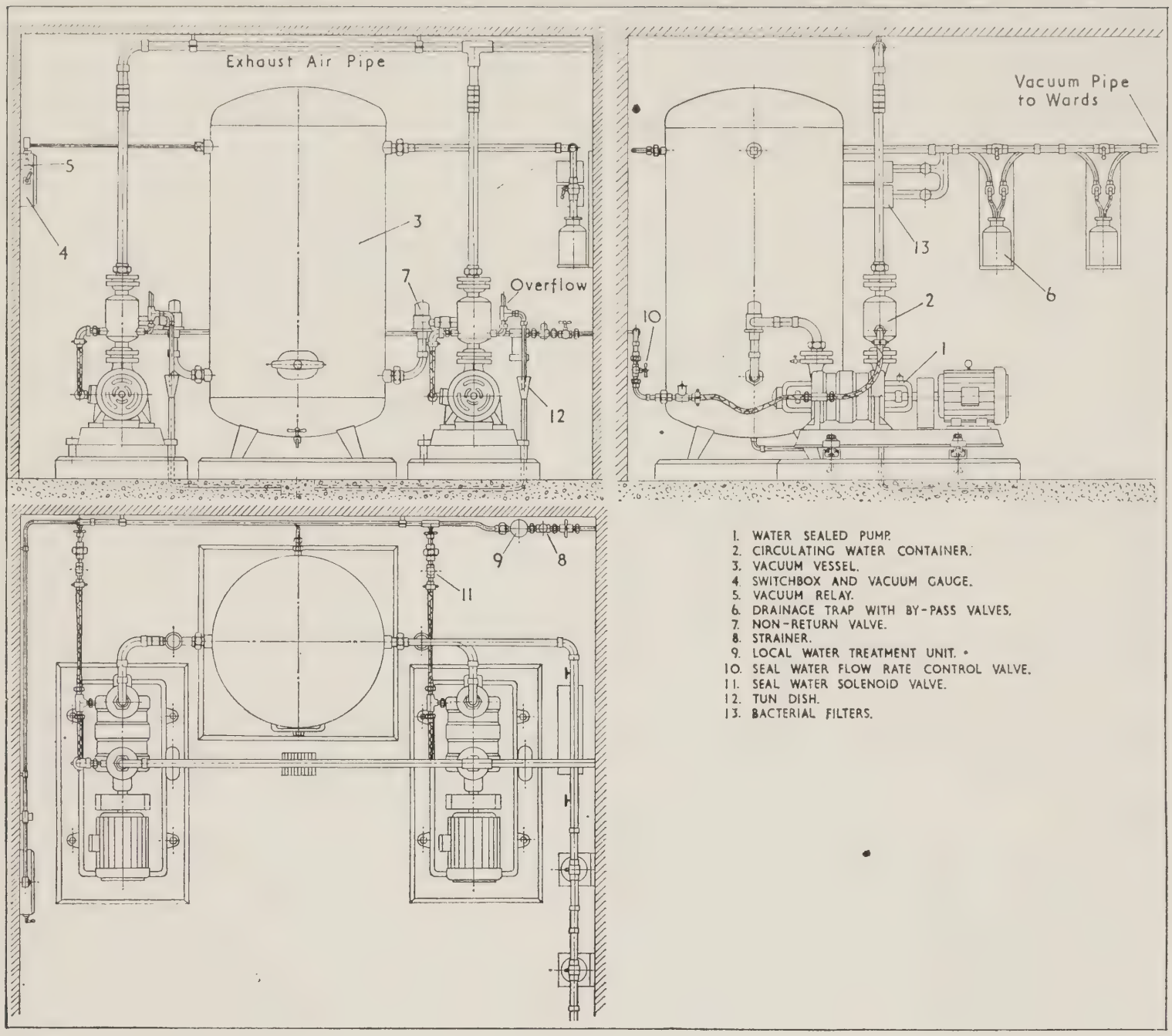

Typical vacuum plant layout
(using water-sealed pump)

Appendix 20

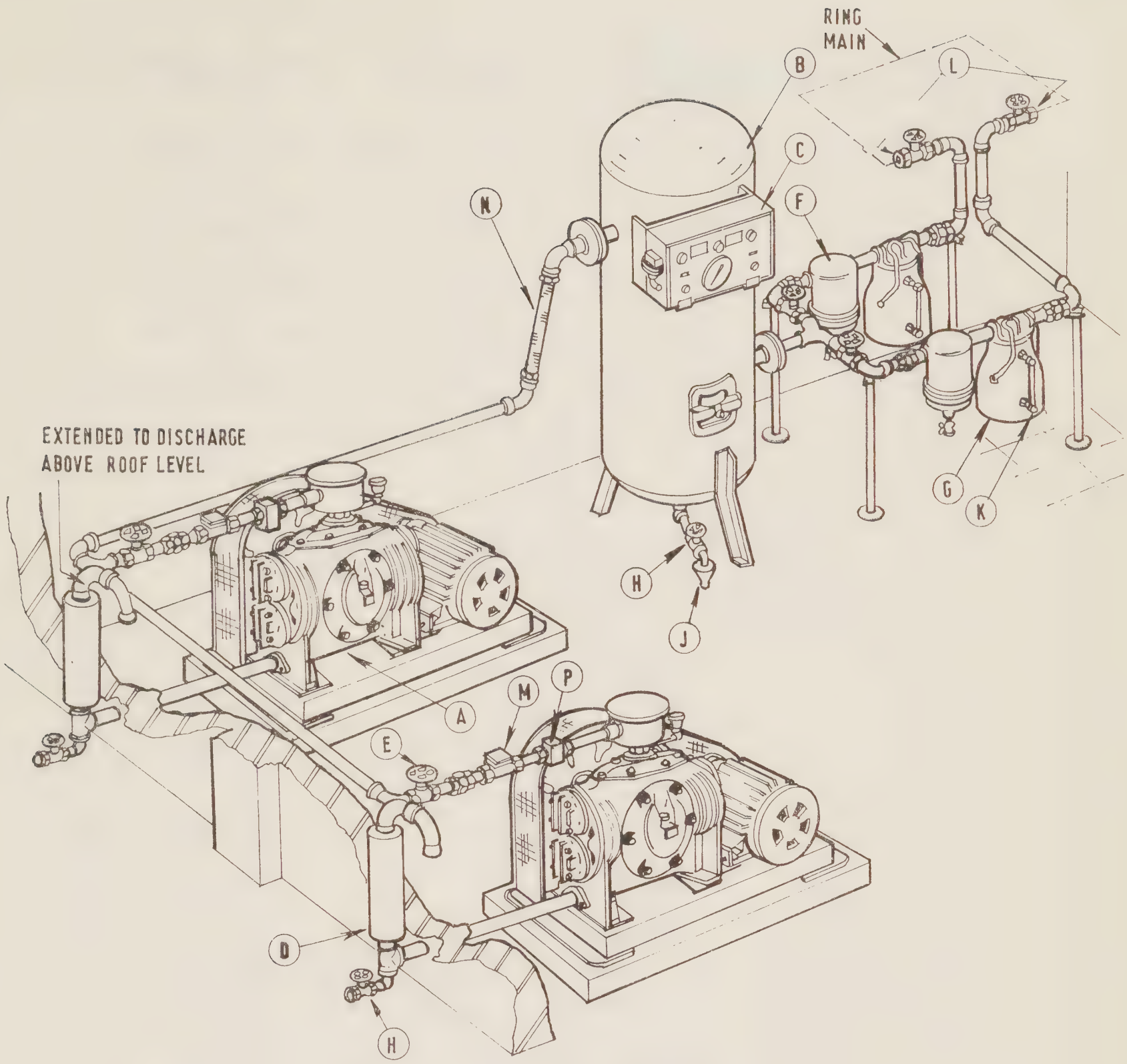

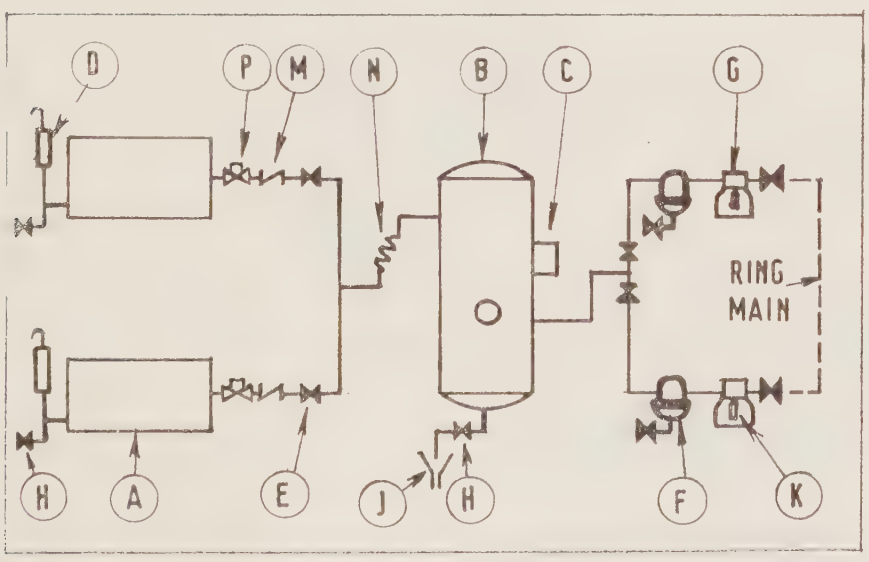

SCHEMATIC LAYOUT

A Vacuum pump unit
B Vacuum storage receiver
C Fully automatic control cabinet
D Exhaust silencer assembly
E Isolating valve
F Bacterial filter
G Drainage trap
H Manual drain valve
J Tun-dish collector
K Sight level tube
L Vacuum mains service (ring main)
M Non-return valve
N Flexible pipe

Typical vacuum plant layout using oil lubricated pumps

Appendix 21

CAPACITY AT MINUS 500 mm. Hg.		LENGTH 'A' (MINIMUM)		LENGTH 'B' (MINIMUM)		ROOM HEIGHT (MINIMUM)	
c. f.m.	*litres/min.*	*Imperial*	*metric*	*Imperial*	*metric*	*Imperial*	*metric*
23·0	650	13 ft. 8 in.	4·2m.	12 ft. 10 in.	3·9m.	8 ft. 6 in.	2·6m.
42·4	1,200	14 ft. 2 in.	4·3m.	13 ft. 6 in.	4·1m.	8 ft. 6 in.	2·6m.
98·6	2,800	19 ft. 0 in.	5·8m.	15 ft. 6 in.	4·7m.	8 ft. 6 in.	2·6m.
172	5,000	20 ft. 0 in.	6·1m.	26 ft. 0 in.	7·9m.	8 ft. 6 in.	2·6m.

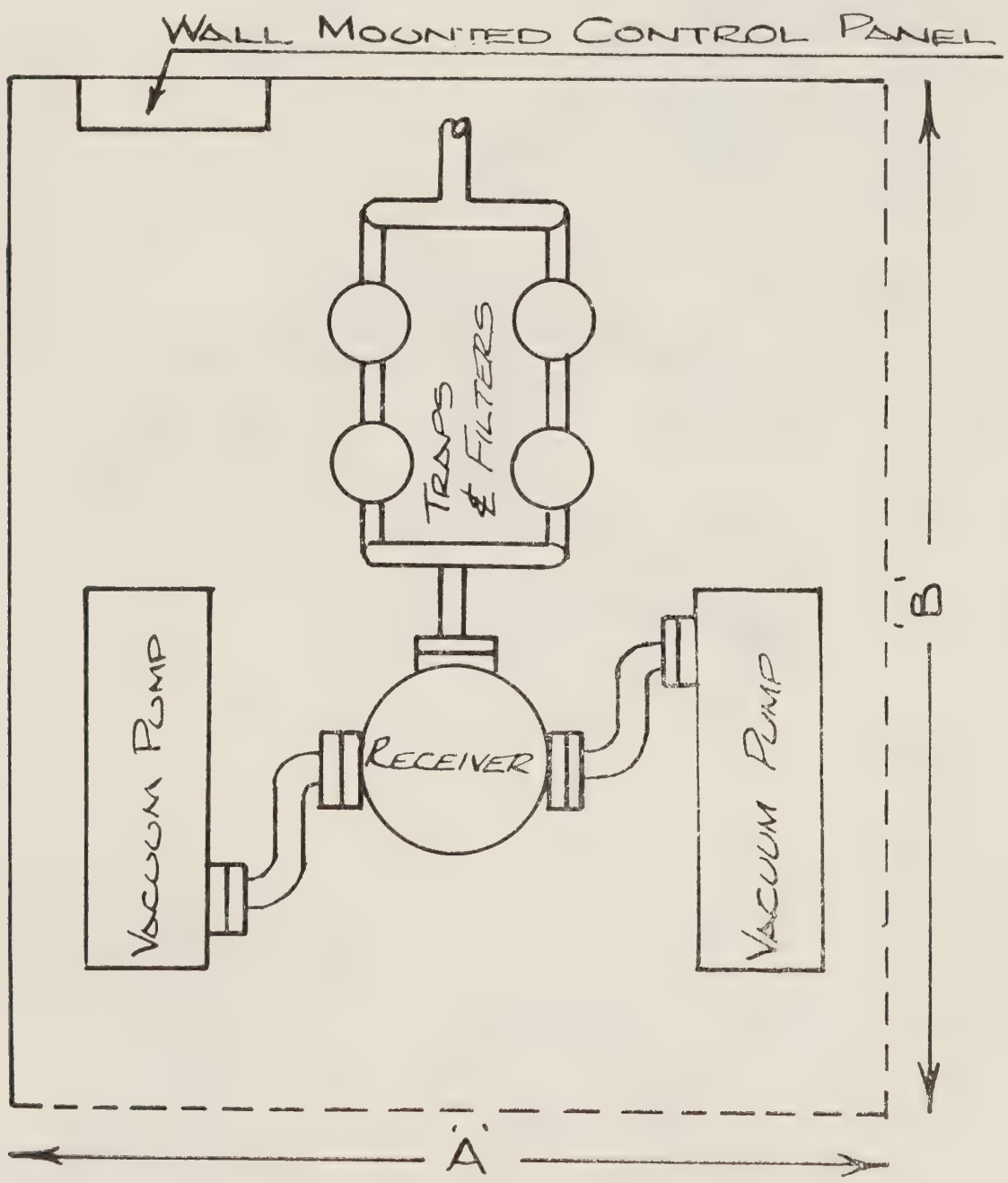

Typical plan of medical vacuum plant room

Appendix 22

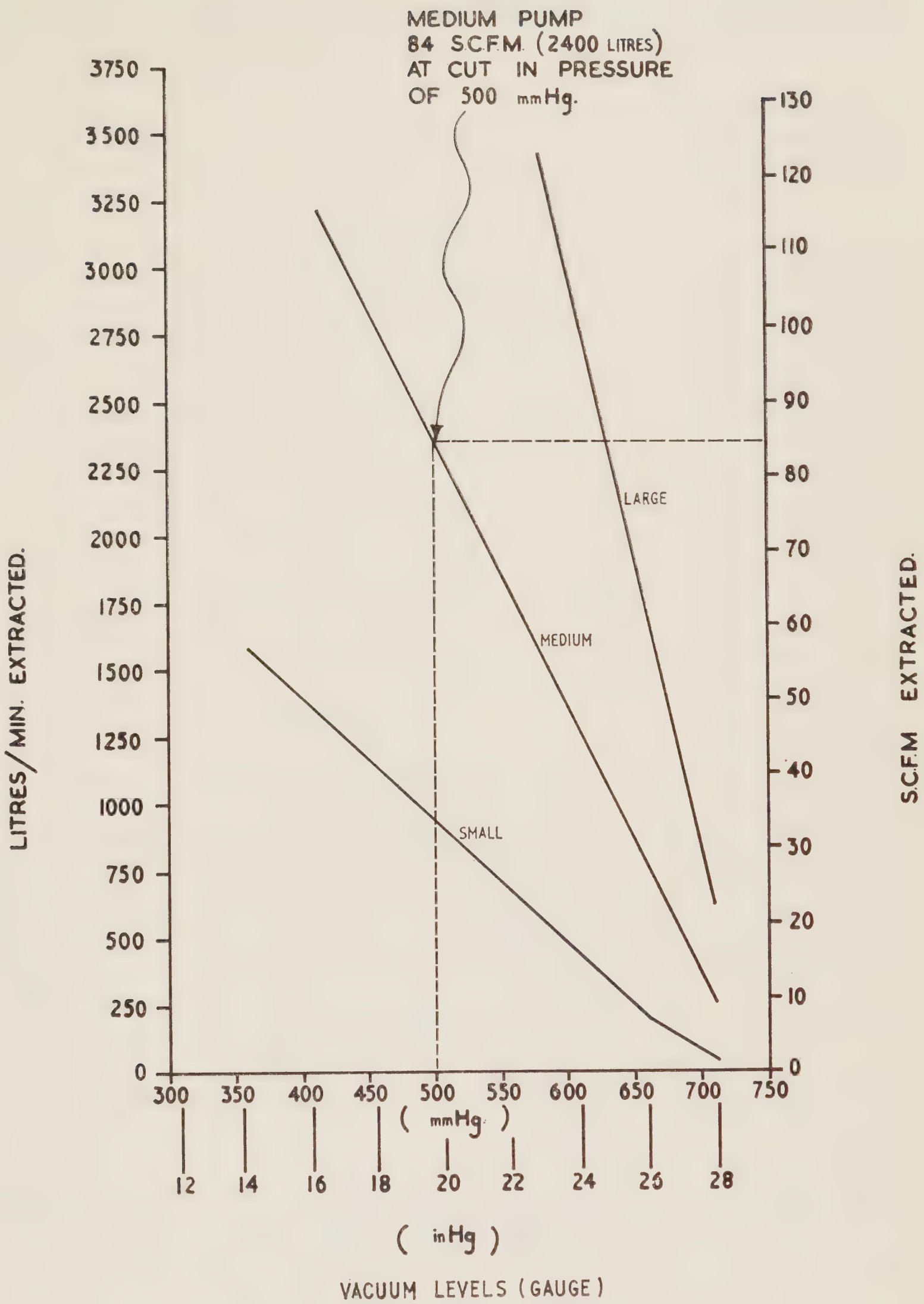

Typical operating curves for vacuum pumps

Appendix 23a

TYPICAL NEW INSTALLATION FOR LARGE HOSPITALS WITH INTEGRATED PMG&V ALARM SYSTEMS

FLASHING LAMP SYSTEM

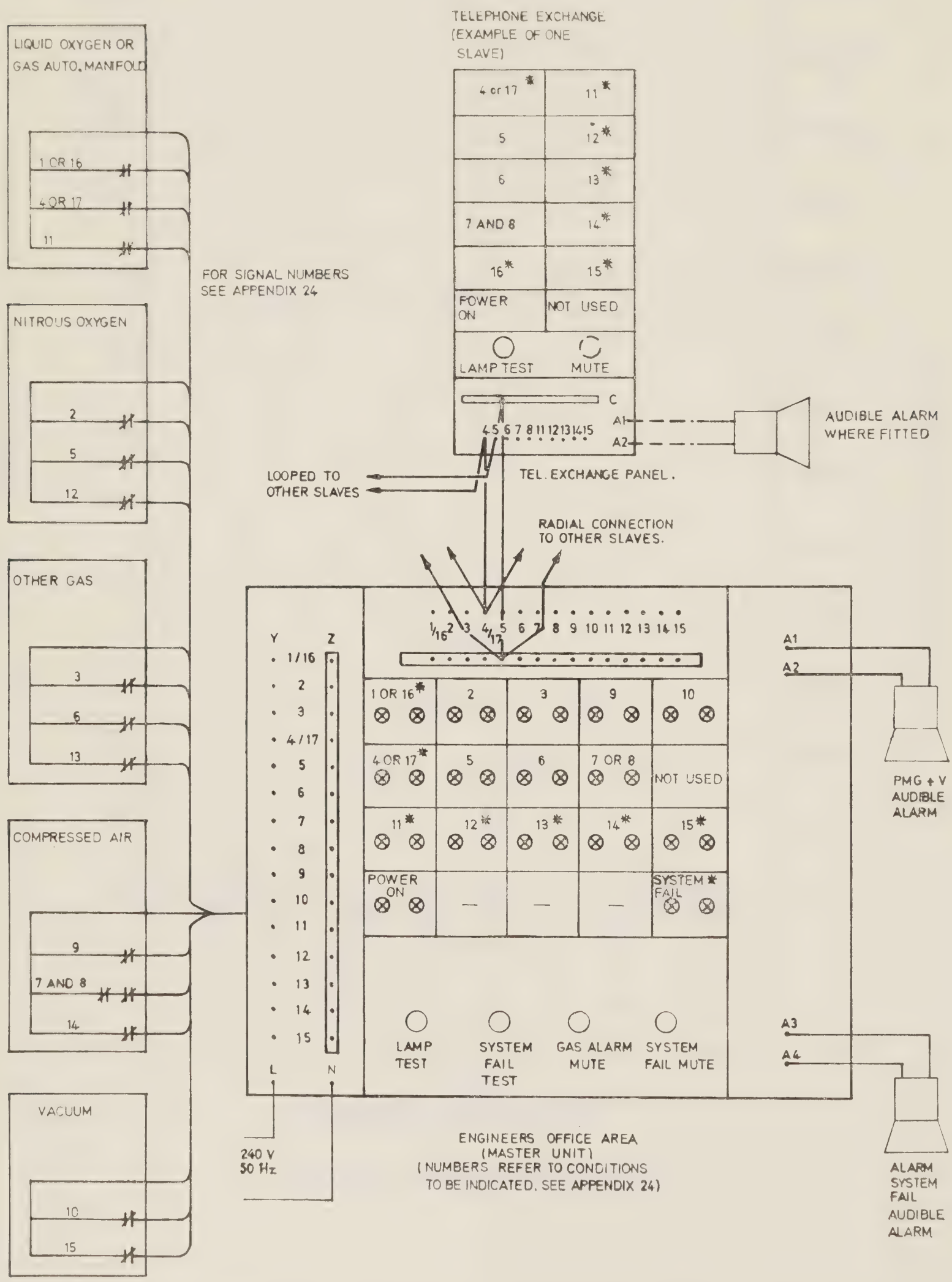

Principle of annunciator and visual alarm systems

Appendix 23b

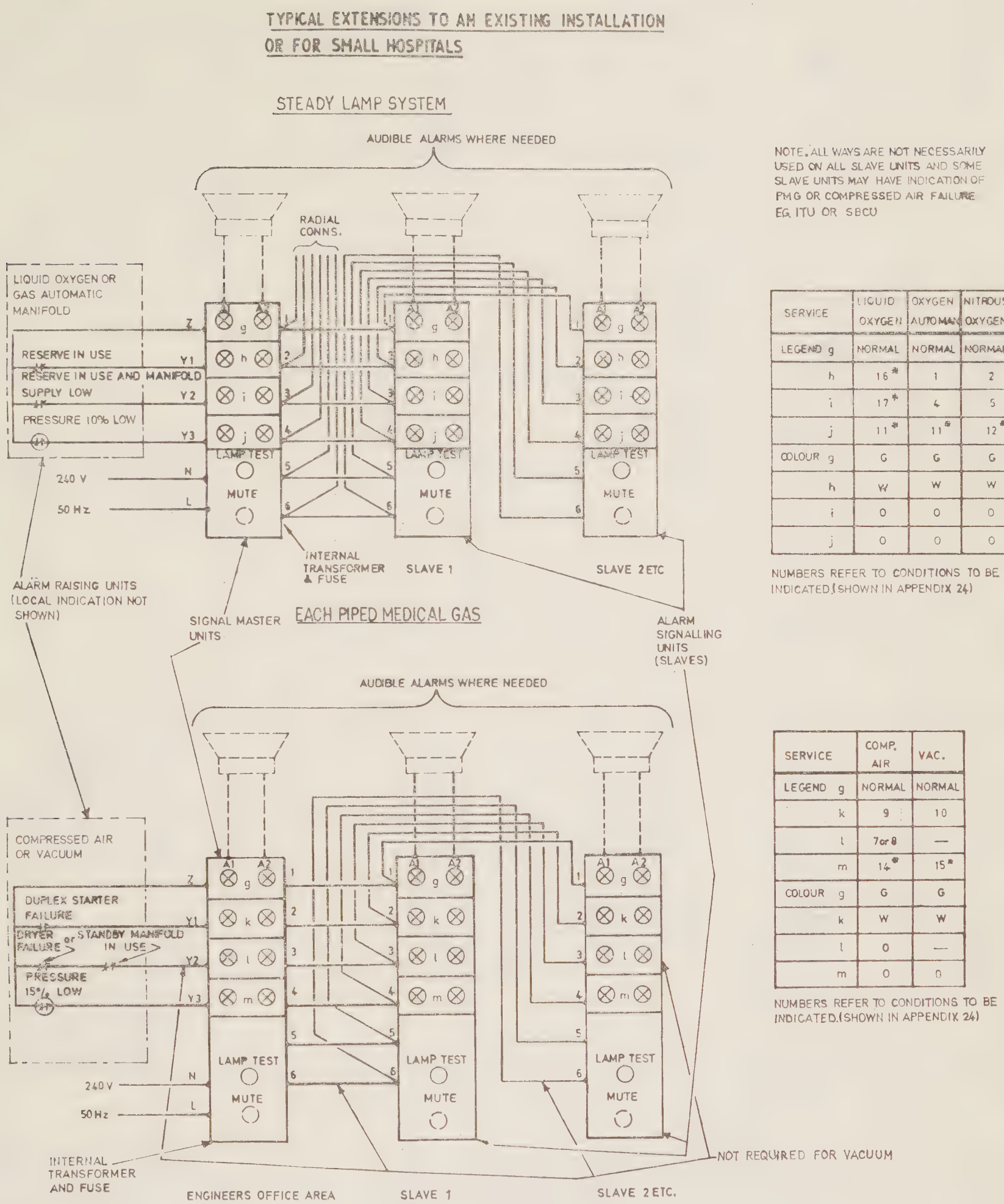

NOTE. ALL WAYS ARE NOT NECESSARILY USED ON ALL SLAVE UNITS AND SOME SLAVE UNITS MAY HAVE INDICATION OF PMG OR COMPRESSED AIR FAILURE EG. ITU OR SBCU

SERVICE	LIQUID OXYGEN	OXYGEN AUTOMAN	NITROUS OXYGEN	OTHER GAS
LEGEND g	NORMAL	NORMAL	NORMAL	NORMAL
h	16*	1	2	3
i	17*	4	5	6
j	11*	11*	12*	13*
COLOUR g	G	G	G	G
h	W	W	W	W
i	O	O	O	O
j	O	O	O	O

NUMBERS REFER TO CONDITIONS TO BE INDICATED. (SHOWN IN APPENDIX 24)

SERVICE	COMP. AIR	VAC.
LEGEND g	NORMAL	NORMAL
k	9	10
l	7 or 8	—
m	14*	15*
COLOUR g	G	G
k	W	W
l	O	—
m	O	O

NUMBERS REFER TO CONDITIONS TO BE INDICATED. (SHOWN IN APPENDIX 24)

* THESE ALARMS ARE AUDIBLE & VISUAL. ALL OTHERS ARE VISUAL ONLY.

NOTES.

1. THE TERMINAL NUMBERS 1 TO 6 ON THESE UNITS ARE MERELY FOR IDENTIFICATION AND ARE NOT ASSOCIATED WITH THE SIGNAL NUMBERS GIVEN HERE OR IN APPENDIX 24.
2. ALARM RAISING UNITS TO BE IDENTICAL FOR BOTH SYSTEMS TO FACILITATE LATER CHANGE OF ALARM SYSTEM.

Principle of annunciator and visual alarm systems

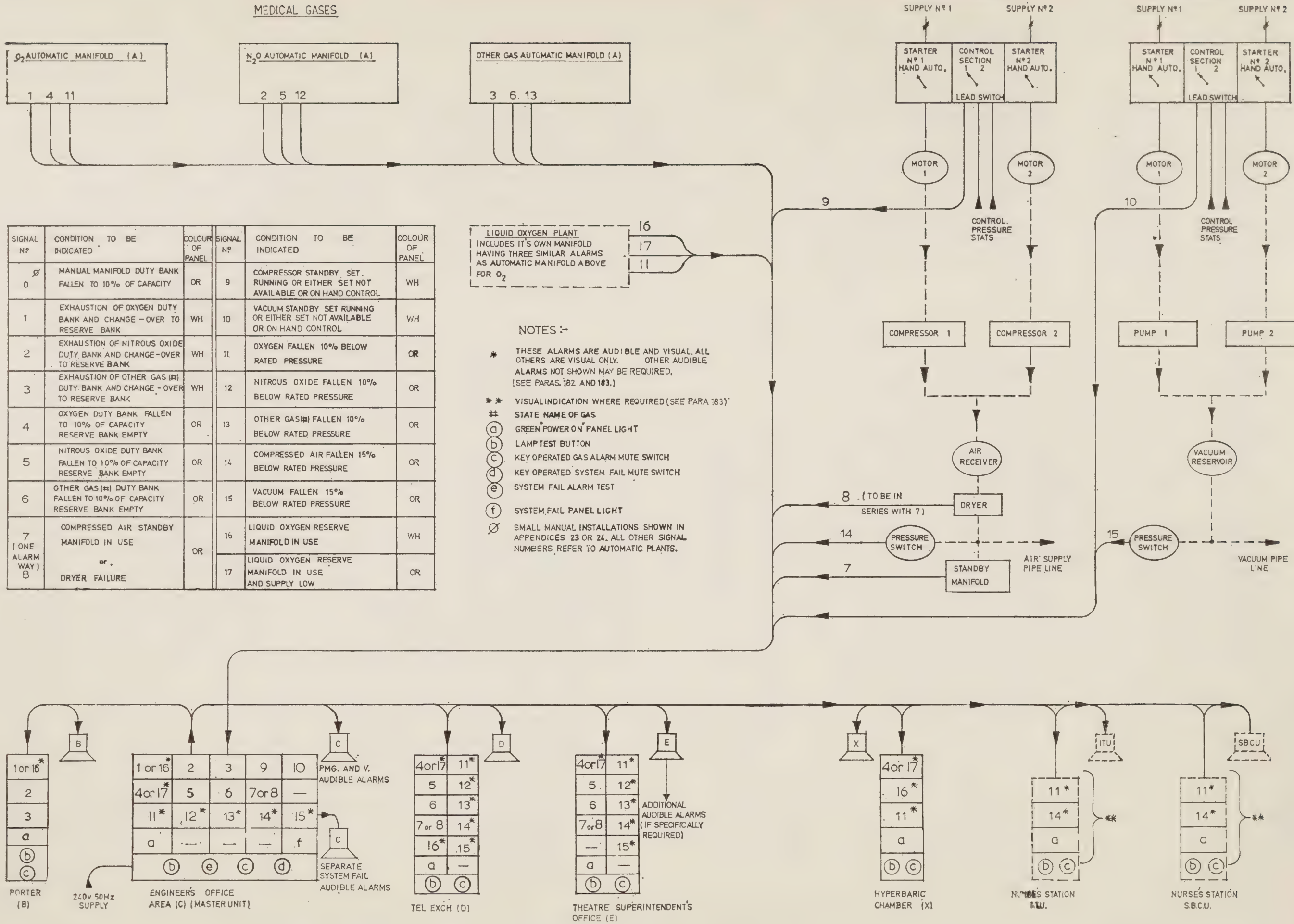

SIGNAL Nº	CONDITION TO BE INDICATED	COLOUR OF PANEL
Ø 0	MANUAL MANIFOLD DUTY BANK FALLEN TO 10% OF CAPACITY	OR
1	EXHAUSTION OF OXYGEN DUTY BANK AND CHANGE-OVER TO RESERVE BANK	WH
2	EXHAUSTION OF NITROUS OXIDE DUTY BANK AND CHANGE-OVER TO RESERVE BANK	WH
3	EXHAUSTION OF OTHER GAS (#) DUTY BANK AND CHANGE-OVER TO RESERVE BANK	WH
4	OXYGEN DUTY BANK FALLEN TO 10% OF CAPACITY RESERVE BANK EMPTY	OR
5	NITROUS OXIDE DUTY BANK FALLEN TO 10% OF CAPACITY RESERVE BANK EMPTY	OR
6	OTHER GAS (#) DUTY BANK FALLEN TO 10% OF CAPACITY RESERVE BANK EMPTY	OR
7 (ONE ALARM WAY) 8	COMPRESSED AIR STANDBY MANIFOLD IN USE or DRYER FAILURE	OR

SIGNAL Nº	CONDITION TO BE INDICATED	COLOUR OF PANEL
9	COMPRESSOR STANDBY SET RUNNING OR EITHER SET NOT AVAILABLE OR ON HAND CONTROL	WH
10	VACUUM STANDBY SET RUNNING OR EITHER SET NOT AVAILABLE OR ON HAND CONTROL	WH
11	OXYGEN FALLEN 10% BELOW RATED PRESSURE	OR
12	NITROUS OXIDE FALLEN 10% BELOW RATED PRESSURE	OR
13	OTHER GAS(#) FALLEN 10% BELOW RATED PRESSURE	OR
14	COMPRESSED AIR FALLEN 15% BELOW RATED PRESSURE	OR
15	VACUUM FALLEN 15% BELOW RATED PRESSURE	OR
16	LIQUID OXYGEN RESERVE MANIFOLD IN USE	WH
17	LIQUID OXYGEN RESERVE MANIFOLD IN USE AND SUPPLY LOW	OR

NOTES :-

* THESE ALARMS ARE AUDIBLE AND VISUAL. ALL OTHERS ARE VISUAL ONLY. OTHER AUDIBLE ALARMS NOT SHOWN MAY BE REQUIRED. (SEE PARAS. 182 AND 183.)

** VISUAL INDICATION WHERE REQUIRED (SEE PARA 183)

\# STATE NAME OF GAS

(a) GREEN POWER ON PANEL LIGHT

(b) LAMP TEST BUTTON

(c) KEY OPERATED GAS ALARM MUTE SWITCH

(d) KEY OPERATED SYSTEM FAIL MUTE SWITCH

(e) SYSTEM FAIL ALARM TEST

(f) SYSTEM FAIL PANEL LIGHT

Ø SMALL MANUAL INSTALLATIONS SHOWN IN APPENDICES 23 OR 24. ALL OTHER SIGNAL NUMBERS REFER TO AUTOMATIC PLANTS.

Layout of typical alarm system elements

Appendix 25

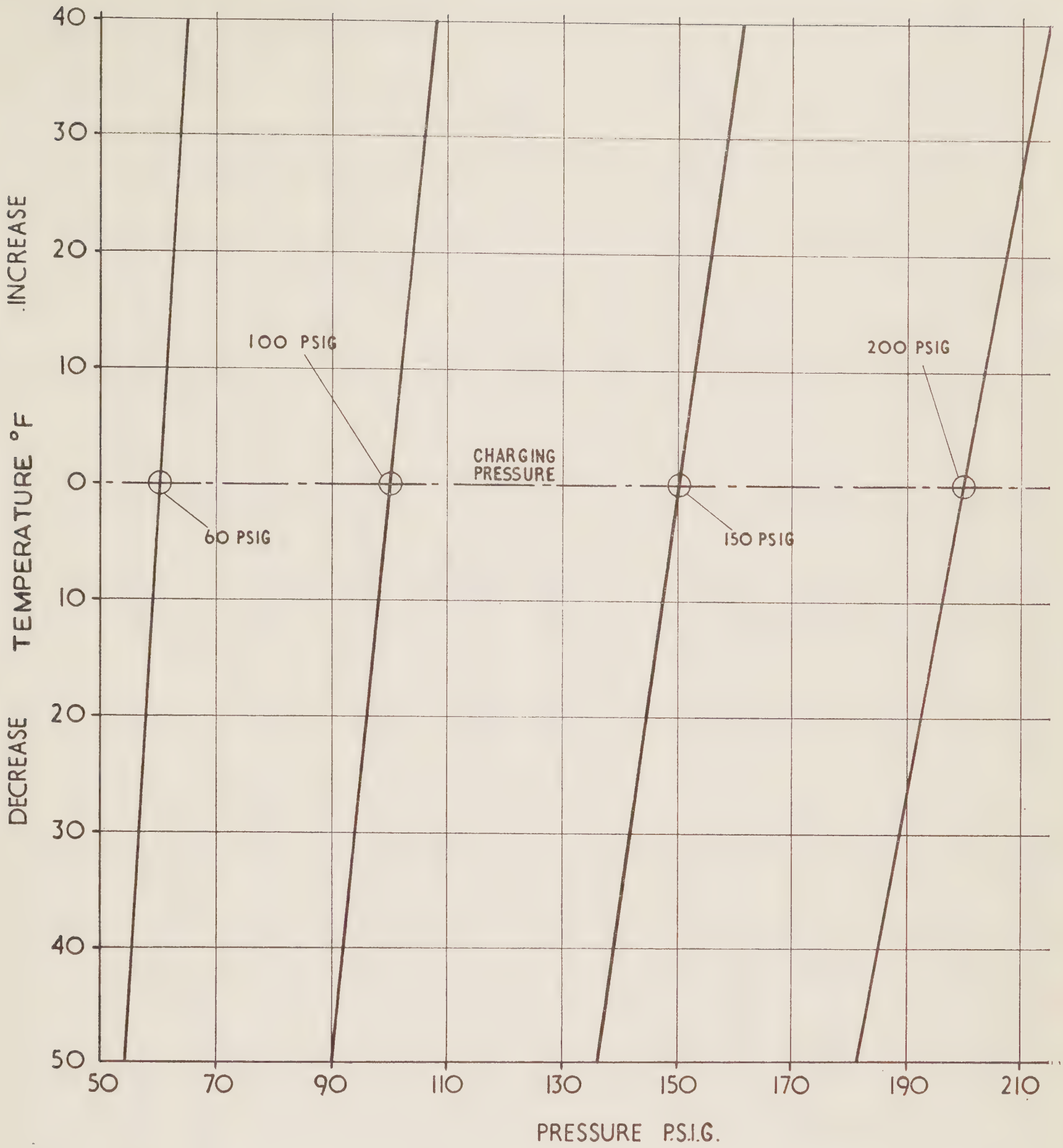

EXAMPLE: The pressure of a system charged at 200 p.s.i.g. at 60°F will fall to 192 p.s.i.g. at 40°F.

Relationship between temperature and certain pressure ranges of a given mass of perfect gas assuming volume of container is constant (Imperial)

Appendix 26

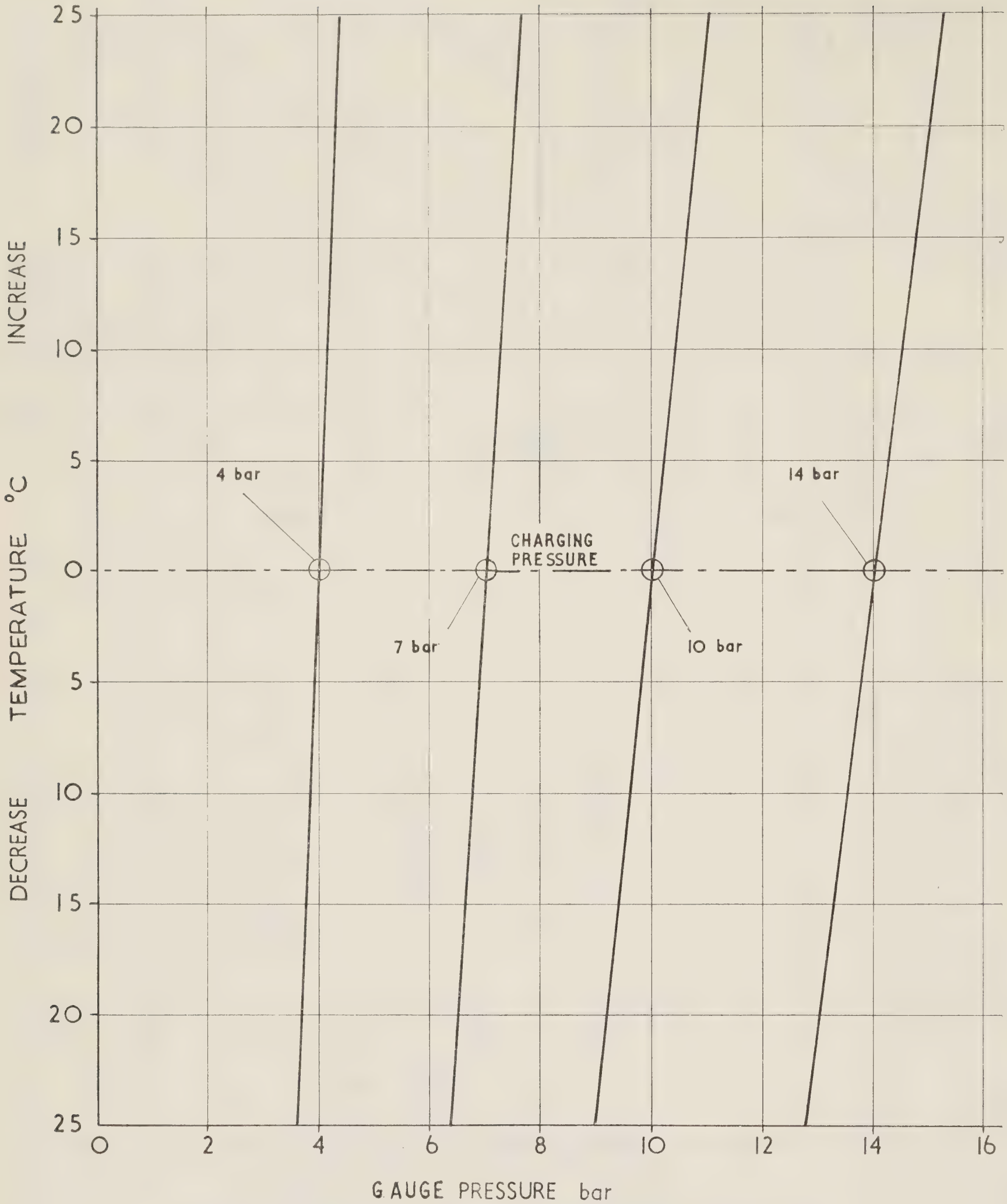

EXAMPLE: The pressure of a system charged at 14 bar at 15°C will fall to 13·5 bar at 5°C.

Relationship between temperature and certain pressure ranges of a given mass of perfect gas assuming volume of container is constant (metric)

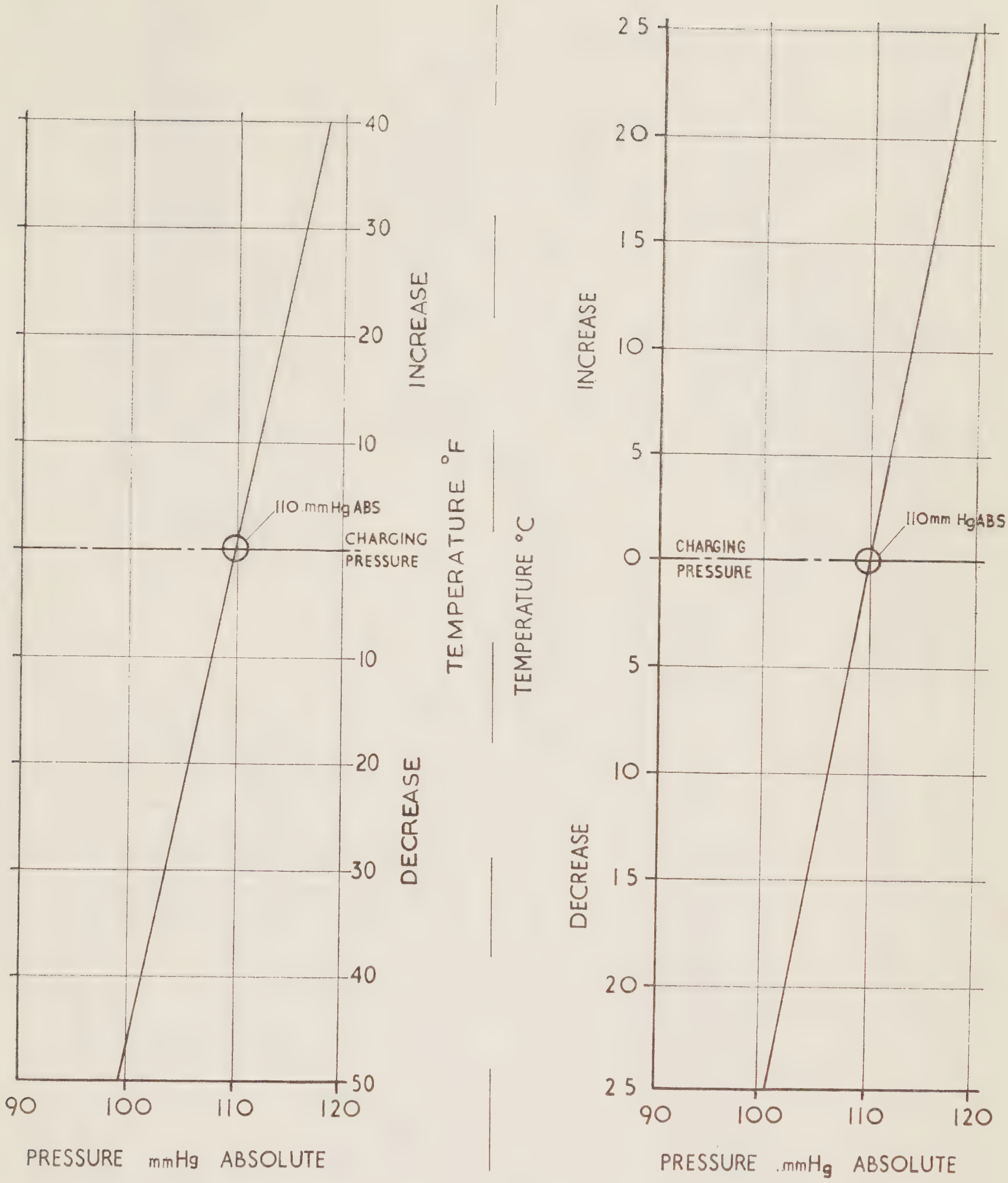

Test pressure/temperature variation for vacuum

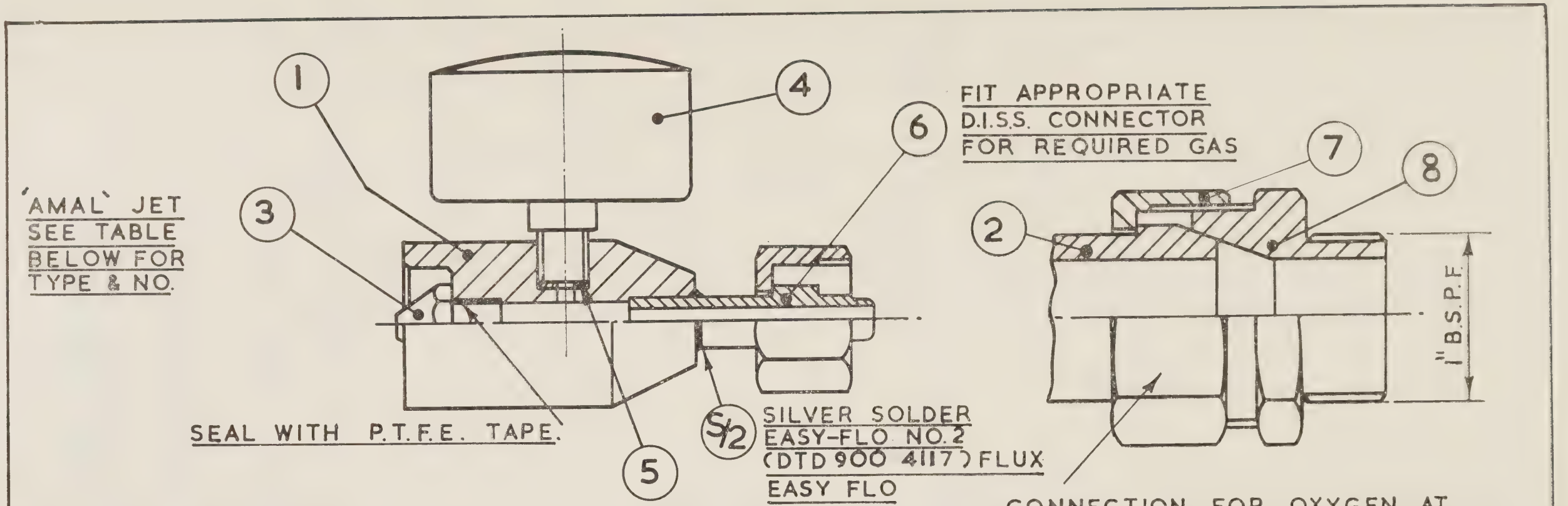

GAS	FLOW LITRES/MIN.	PRESSURE P.S.I.G.	'AMAL' JET	
			TYPE	NO.
OXYGEN	20	57	187/001	65
OXYGEN	40	57	187/001	130
OXYGEN	400	57	357/003	1420
50% N_2O+50% O_2	20	57	187/001	65
50% N_2O+50% O_2	275	45	357/003	1220
NITROUS OXIDE	15	57	187/001	55
AIR	250	92·5	187/001	540
AIR	50	100	187/001	95
AIR	65	57	187/001	200
AIR	50	57	187/001	150

NOTES:
JET BODY ITEM 1&2 TO BE STAMPED WITH 1/8" HIGH LETTERS WITH THE FOLLOWING
GAS (ie. OXYGEN)
FLOW (ie. 400 LITRES / MIN.)
PRESSURE (57 PSIG) & JET TYPE & NO
OXYGEN, NITROUS OXIDE & 50% N_2O + 50% O_2
TO BE STAMPED WITH
AIR EQUIVALENT OXYGEN, etc.

Flow rate and delivery pressure test unit for pressure gas systems

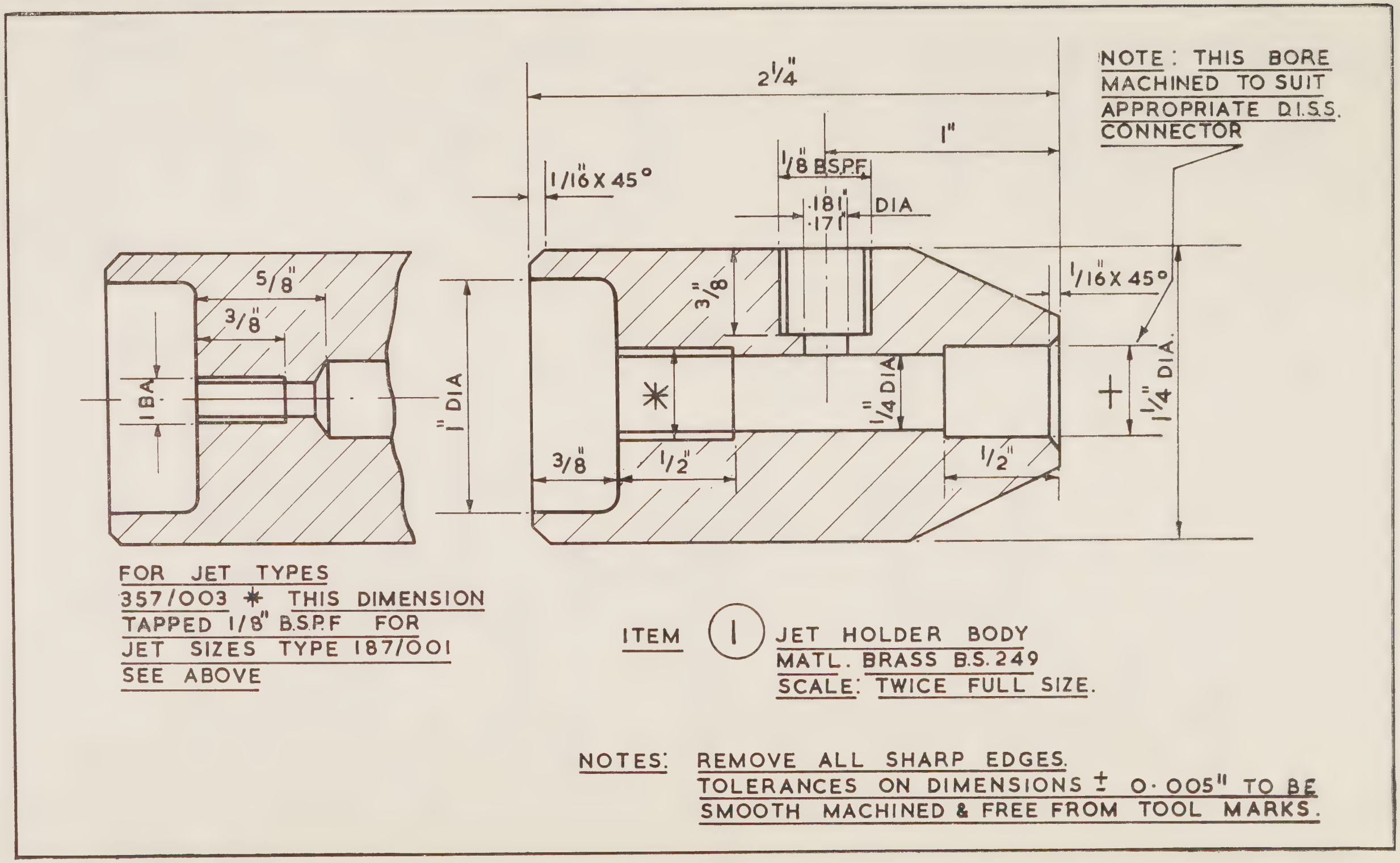
NOTE: THIS BORE MACHINED TO SUIT APPROPRIATE D.I.S.S. CONNECTOR
2 1/4"
1"
1/8" B.S.P.F.
·181"
·171"
DIA
1/16" X 45°
1/16" X 45°
5/8"
3/8"
1 BA
1" DIA
3/8"
1/2"
1/2"
1 1/4" DIA
1 1/4" DIA.
FOR JET TYPES 357/003 ✱ THIS DIMENSION TAPPED 1/8" B.S.P.F FOR JET SIZES TYPE 187/001 SEE ABOVE
ITEM 1 JET HOLDER BODY
MATL. BRASS B.S. 249
SCALE: TWICE FULL SIZE.
NOTES: REMOVE ALL SHARP EDGES.
TOLERANCES ON DIMENSIONS ± 0·005" TO BE SMOOTH MACHINED & FREE FROM TOOL MARKS.

Appendix 28 (continued)

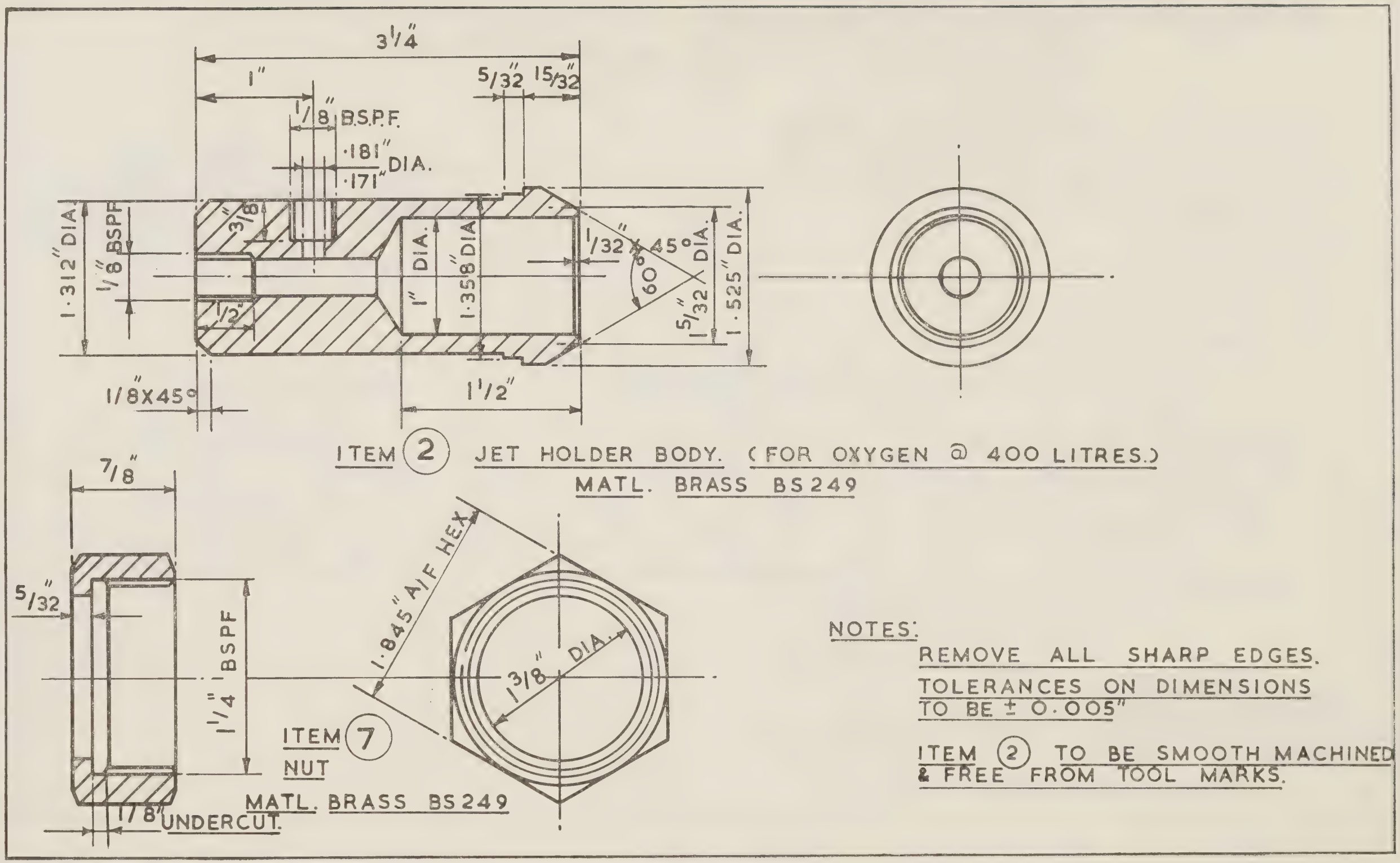

Appendix 28 (continued)

Parts list

Item	*Description*	*Material*	*No. off*	*Remarks*
1	Jet holder body	Brass B.S.249	1	
2	Jet holder body	Brass B.S.249	1	Body for oxygen at 400 litres/min. only
3	'Amal' calibrated jet	Brass	1	Select from list for required service
4	2 in. pressure gauge	Case and bezel chromium plated	1	0-160 p.s.i. to B.S.1780 back inlet $\frac{1}{8}$ in. B.S.P.
5	Seating washer	Fibre $\frac{1}{16}$ in. thick	1	$\frac{21}{64}$ in o.d. $\frac{11}{64}$ in. dia. bore
6	Diss connector		1	To suit gas service
7	Gland nut $1\frac{1}{4}$ in. B.S.P.F.	Brass B.S.249	1	
8	$1\frac{1}{4}$ in. B.S.P.F.—1 in. B.S.P. adaptor	'Yorkshire fittings' No. 70 hd.	1	

NOTE
Items 2, 7 and 8 are used only on test unit for oxygen and 400 litres.

Appendix 29

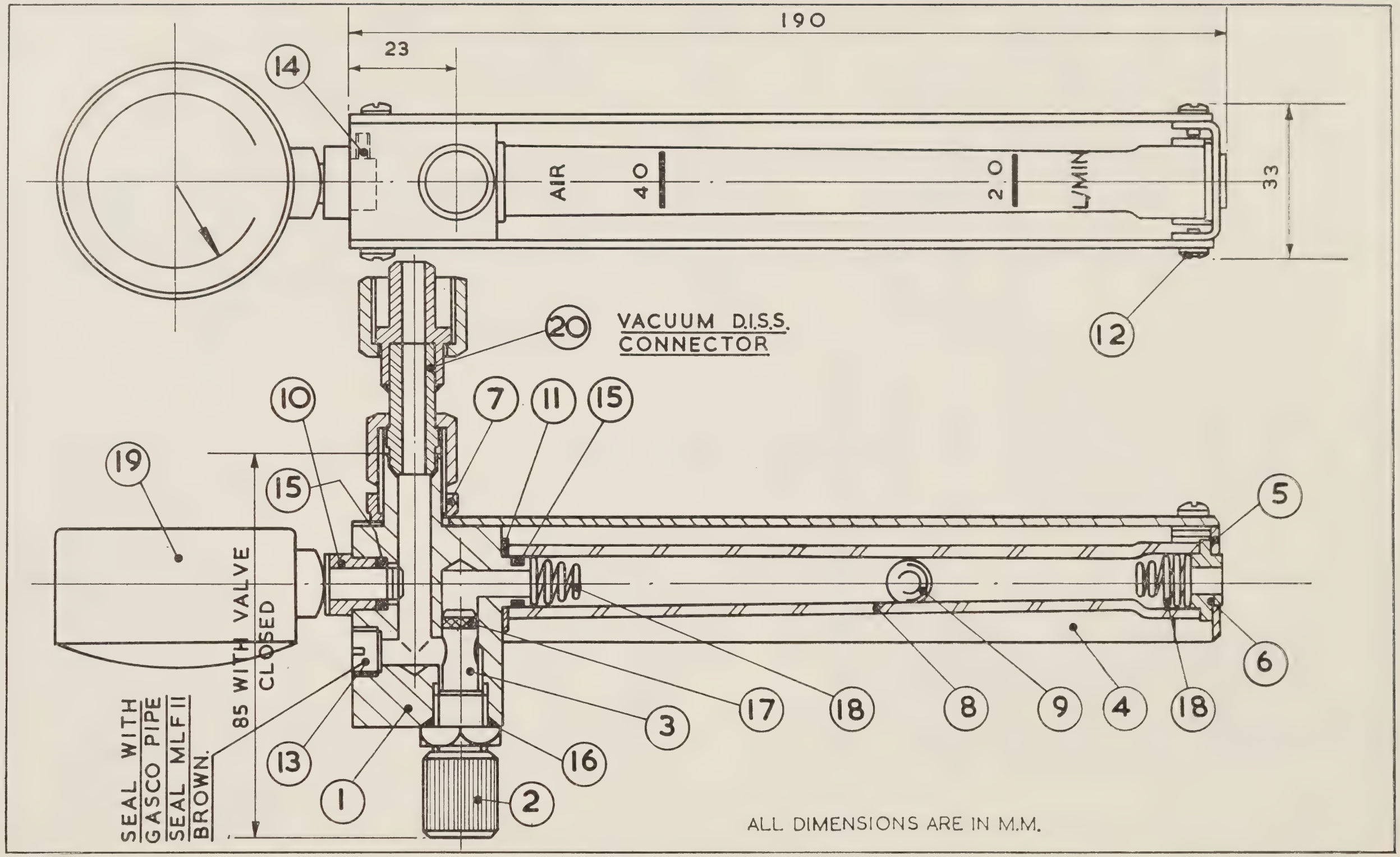

Flow rate and vacuum test unit for vacuum systems

Parts list

Item	*Description*	*No. off*	*Remarks*
1	Top connection block	1	Rotameter pt. no. B 46954
2	Valve knob	1	Rotameter pt. no. B 46522
3	Valve Assy. 1100 series	1	Rotameter pt. no. B 37617/1
4	Chassis	1	Rotameter pt. no. B 29540
5	Chassis end	1	Rotameter pt. no. A 29541
6	Tube locator	1	Rotameter pt. no. A 46957
7	Lock nut	1	Rotameter pt. no. A 46955
8	Flowmeter tube	1	Rotameter pt. no. A 32540
9	Ball float	1	Code no. B6S
10	Collar	1	Rotameter pt. no. A 46956
11	Washer	1	Rotameter pt. no. A 33309
12	Self tapping screw—npk. pan. hd. posi driv.	5	Type 2 No. 6 × $\frac{3}{16}$ in. long
13	$\frac{1}{8}$ in. B.S.P. par. plug × $\frac{1}{4}$ in. long	1	Brass
14	4BA × $\frac{3}{16}$ in. long grub screw	1	Steel
15	'O' ring B.S.011	2	Nitrile
16	'O' ring B.S.013	1	Nitrile
17	'O' ring B.S.008	1	Nitrile
18	Spiral float stop	2	Rotameter pt. no. A 31237
19	0-760 mmHg vac. gauge	1	Smiths monogauge, bottom connection. Ref. no. 2 in. MI3V 0-760 mmHg $\frac{1}{8}$ in. B.S.P.
20	Vacuum diss connector	1	

References

British Standards Institution publications

B.S.21: Pipe threads.
B.S.89: Electrical indicating instruments.
B.S.349: Identification colours for gas cylinders (industrial gases).
B.S.381C: Colours for specific purposes.
B.S.487: Part I. Fusion—welded steel air receivers.
B.S.587: Motor starters and controllers.
B.S.720: Calibration of carburettor jets.
B.S.659: Light gauge copper tubes (light drawn).
B.S.1042: Methods for the measurement of fluid flow in pipes.
B.S.1123: Safety valves, gauges and other safety fittings for air receivers and compressed air installations.
B.S.1319: Medical gas cylinders and anaesthetic apparatus.
B.S.1500: Fusion welded pressure vessels for general purposes.
B.S.1701: Air filters for air supply to I.C. engines and compressors.
B.S.1710: Identification of pipe lines.
B.S.1780: Bourdon tube pressure and vacuum gauges.
B.S.1845: Filler metals for brazing
B.S.2051: Tube and pipe fittings for engineering purposes.
B.S.2831: Methods of test for air filters used in air conditioning and general ventilation.
*B.S.2871: Part I. Solid drawn copper tubes (Metric).
B.S.2951: Glossary of terms used in high vacuum technology.
B.S.3202: Recommendations on laboratory furniture and fittings.
B.S.3506: Unplasticised P.V.C. pipe for industrial uses.
B.S.3636: Methods of proving the gas tightness of vacuum or pressurised plant.
B.S.3643: I.S.O. metric screw threads.
B.S.3928: Method of test for low penetration air filters.
B.S.3970: Part I. Steam sterilizers for porous loads.
B.S.4199: Surgical suction apparatus.
B.S.4275: Recommendations for the selection, use and maintenance of respiratory protection.
B.S.4346: Joints and fittings for use with unplasticised P.V.C. pressure pipes.
B.S.4514: Unplasticised P.V.C. pipe fittings and accessories.
*B.S. Hospital medical vacuum pipe line services.
*B.S. Terminal units for medical gas supply services.
B.S.C.P.326: The protection of structures against lightning.

All references are to the edition current at the date of going to press.

Her Majesty's Stationery Office publications

Hospital Design Note No. 4, Noise control.
Hospital Building Note No. 4, Ward units.
Hospital Building Note No. 12, Out-patient department.
Hospital Building Note No. 15, Pathology department.†
Hospital Building Note No. 21, Maternity department.
Hospital Building Note No. 22, Accident and emergency department.
Hospital Building Note No. 26, Operating department.
Hospital Technical Memorandum No. 1, Anti-static precautions: rubber, plastics and fabrics.
Hospital Technical Memorandum No. 13, Planned preventive maintenance.
Hospital Technical Memorandum No. 16, Fire precautions.
Hospital Technical Memorandum No. 17, Commissioning of hospital engineering services.
H.M. Factory Inspectorate Technical Data Note 2/69, Threshold limit values for 1969.

Institution of Electrical Engineers publications

Regulations for the electrical equipment of buildings.

* Under preparation.
† Revision under preparation.

Index

Subject	Paragraph No.
Access	
for vehicles	94, 99, Table 12
to manifold rooms and liquid oxygen storage areas, control of	216
Accommodation for medical gases, compressors and vacuum pumps	197
Accommodation of pipes ..	62
Activated alumina	142, 145, 146
Activated charcoal filters ..	135
After-coolers	130
Air compressors	122
Air consumption by air dryers ..	150
Air-cooled after-coolers ..	130, 131
Air dryers	139
Air dryers, heated and 'Heatless'	141, 151
Air drying	136
Air inlet filters	121
Air inlet point for compressors	128, 201
Air operated equipment, schedule of	32, App. 7
Air pressure	
at plant room wall	108
at terminal units	11, 108
control for special sections of the distribution system ..	117
control in plant room ..	116
Air purity requirements ..	112
Air receivers	133
Air treatment plant, maintenance of	259
Alarm signalling system test ..	245
Alarm system	177, Table 13, App. 23, 24
Alarm system with flashing lights	185, App. 23, 24
Alarm system with steady lights	189, App. 23
Alarms for air dryer failure ..	149
Alterations to existing installations	6
Anaesthetic dept. laboratory/workshop	2
Analgesic gas, flow rates at terminal units and pipe lines ..	32, 40
Analysers, Beckman and Servomex	247
Annunciating alarm systems ..	185, 189
"Anti-confusion" (cross connection) tests	235
Audible alarms	182
Automatic drain trap	132, 133
Automatic manifold arrangement—typical	78, App. 13
Bacterial filters	160
Beckman analyser	247
Booms	
separation of pipes and wiring in	196
wall-mounted, for theatres ..	15, App. 5
"Bornes", for theatre table service	15
Boxes, valve	29
Branches, flow rates in ..	34, 37
British standard copper pipes, old and new sizes	Table 8
Buried pipes, joints in	72
Cables installation, separation and type	67, 196
Calculation of flow in risers and distributors	App. 10, 12
Capacity of vacuum installations	163, 164, 165, 169
Capacity of manifold installations	78
Ceiling rose fittings for theatres	15, App. 5
Check lists of equipment, for maintenance purposes ..	260
Chilled water air dryers (not suitable for piped medical compressed air systems)	140
Colour codes, identification ..	11, 79, App. 4
Column fittings for theatres ..	15, App. 5
Comparison between old and new British Standards for copper pipes	Table 8
Completed pressure gas systems, tests for leakage on	231
Completed vacuum systems, tests for leakage on	232
Compressed air	
diversity in theatres	41
installation	108, App. 16, 17
installation plant tests ..	245
manifold installations ..	78, 157
pipe lines and compressors, flow rates for	41
pipe line sizing	51, 54, Table 6
Compressor operating pressure	127
Compressors, air	122
Compressors, air inlet, siting of	201
Consumption of air by air dryers	150
Consumption rates, compressed air equipment	32, 42, 108, App. 7
Consumption rates oxygen and nitrous oxide	30, App. 6
Continuity (cross connection or "anti-confusion") tests ..	235
Control system, compressor ..	156
Conversion factors for units commonly used	Table 2
Coolers, air	130
Corrosion of pipes	73
Counter, hours run	129, 170
Cross connection tests	235
Cross infection	17
Cylinder connections, oxygen and air	92
Cylinder stores, design of ..	89

Subject	Paragraph No.
Cylinders	
empty, marking and storage of	212
restriction on storage of ..	211, 212, 213
safety in handling	218
sizes commonly used on manifolds	79, Table 11
Daily tasks (maintenance) ..	255
De-greasing pipes for vacuum installations	68
De-greasing pipes, specification for	21
Delivery pressure and total flow rate test	240
Dental department, vacuum services for	2, App. 2
Dental surgeries, compressed air flow rates for	41
Desiccant air dryer	140, App. 18
Desiccants	142, 154
Dew point	138, 139, 140
Differential, vacuum pump ..	171
Differentiator, oxygen/nitrous oxide	248
Discharge point, vacuum ..	162
Diversity	
for compressed air in theatres	41
for oxygen and nitrous oxide in theatres	34
for oxygen, nitrous oxide and medical gas mixture pipe sizing	35–40
for vacuum in theatres ..	46
for vacuum in wards ..	47, App. 11
Draeger gas detector tubes ..	247
Drain cocks for pipe lines ..	71
Drainage	
of pipe lines	70
of vacuum reservoir	172
trap (vacuum)	161
Dryer/final air filter assembly ..	152, 154
Dryers	
air	139
air, chilled water (not suitable for piped medical compressed air)	140
air, general arrangement ..	148, App. 16, 18
air, refrigerated (not suitable for piped medical compressed air)	140
Dryness of air	114
Ducts, ventilation of	63
Dust in desiccant of air dryers ..	143, 144, 145
Earthing	194, 244
Electric cables, separation from P.M.G. and V. pipe lines ..	67, 196
Electrical contractors work on alarm system	190
Electrical installations in manifold rooms and plant rooms ..	207

Subject	Paragraph No.
Electricity supply to liquid oxygen installations	99
Electricity supply to medical gas installations	192
Emergency	
electricity supply to air dryers	149
fire, keys for valve boxes ..	216
manifold for liquid oxygen installations	96
operation for compressed air supplies	149, 157
operation of vacuum service	176
supplies on manifold installations	83
valves for	25
Equipment	
check lists	260
for medical compressed air installations	108, 148, App. 16
requiring compressed air ..	32, 42, 108, App. 7
"Essential" supplies, electricity services	193
Explosion risks, precautions against	210
Extensions to existing installations	6
Filters	
activated charcoal	135
air inlet	121
at point of supply	111
bacterial	160
final air, in plant room ..	152
in patient ventilators ..	120
maintenance of	257
pre-	153
pressure drop across vacuum	169
upstream of air dryer ..	134
Fire and safety precautions ..	210
Fire detection system	217
Fire precautions, liquid oxygen	105
Fittings, pipe	23, Table 9
Fixed outlets for theatre services	15
Flashing light annunciating alarm system	185, App. 23, 24
Flexible pipe line connections, electrical bonding of ..	195
Flow capacities for pipes for vacuum	59, Table 7
Flow capacities for pipes, pressure gases and compressed air	55, 58, Tables 5, 6
Flow in risers and distributors, calculation of	App. 10, 12
Flowmeters	9, 241
Flow rates	
in gas pipe lines	34
at terminal units	31, 32, Table 3
for compressed air pipes and compressors	41
for vacuum pipes and pumps	43, App. 8
Free air rating of vacuum plant	50, 165

Subject	Paragraph No.
Full cylinder stores, heating of	208
Full cylinder stores, ventilation of	209
Gas detector tubes, Draeger ..	247
Gas flow rates	30
Gas identification	247
Gas pipe line sizing	51, 54, Table 5
Gauges	
on distribution system ..	76
on manifolds	86
vacuum, in plant room ..	174
tests of	244
Heated air dryers	141, 150, 151
Heating of manifold rooms, plant rooms and full cylinder stores	208
"Heatless" air dryers	141, 150, 151
Hoses and hose connections ..	17, 19
Hours run counter	129, 170
Humidity of compressed air supplies	147, 154
Hyperbaric beds, oxygen flow rates for	33, Table 4
Hyperbaric chambers, oxygen flow rates for	33, Table 4
Identification of gases	247
Identification of pipe lines and terminal units	11, 77, App. 4
Identity plates for valves ..	28
Indicators, alarm	180, 184, App. 23
Inlet point, air	128
Installation	
of alarm system	190
of electric cables	67, 191, 196
procedure	62
Intensive therapy unit, audible alarm for	183
Intensive therapy unit, oxygen and nitrous oxide, flow rates for	36, 41
Intervals between pipe supports	69, Table 10
Jets, calibrated, for total flow rate test	241, App. 28, 29
Joints in buried pipes	72
Joints in pipes	22, 72
Keys, duplicate, "Fire" ..	216
Keys, valve boxes	29
Laboratory services	2, App. 1
Leakage on pressure gas systems, tests for	227
Leakage on vacuum systems, tests for	228
Life of desiccant bed in air dryers	154
Lighting for liquid oxygen storage compounds	99
Lighting for manifold rooms ..	207
Lightning protection	197
Liquid oxygen	
general site requirements ..	99
installations	95
installation plant tests ..	244
installation, standby manifold accommodation	96
storage compounds, construction of	99, 102
storage, site	102
Local water treatment plant ..	124, 130, 166
Local water treatment plant, maintenance of	258
Location	
of terminal units	12
of valves	28, 71, 74
of warning and alarm indicators	184
Locks for drain valves	71
Maintenance	3, 249
contracts	5, 255
of air treatment plant ..	153, 160, 259
of filters	257
of local water treatment plant	258
organisation of	255
purposes, valves required for	25
records	256
tasks	3, 252
Manifold	
change-over pressure ..	81
change-over valve test ..	244
emergency, for liquid oxygen installations	96
installations	78, App. 13
installation tests	244
pressure gauges	86
Manifold room, design of ..	89, App. 14, 15
Manifold room for liquid oxygen installations	96
Manifold room, sites for ..	88
Manifold rooms, electrical installation in	207
Manifold rooms, heating of ..	208
Medical compressed air	
existing supplies	107
installations, cost	109
installations, general ..	106
installations, sterility ..	110, 111
pressure control at terminal units	119
Medical gas mixtures, pipe line sizes for	40
Minimum sizes of pipes ..	58, 59, 60
Mixed gases (nitrous oxide—oxygen)	11, 13, 32, 208

Subject	Paragraph No.
Molecular sieve air dryers	142, 147
Motor starting arrangements	156, 175
Mounting heights	
for theatre fittings	18
for terminal units	13
for valves	28
Nitrous oxide	
consumption rates	30, App. 6
oxygen mixture	11, 13, 32, 208
pipe line sizing	34–39, Table 5
Noise	
compressors	128
control measures	200, 202, 203
vacuum pumps	167
Nominal supply pressure at terminal unit	Table 3
Non-return valves on vacuum pumps	168
Notices, location of control valves	215
Notices, smoking, welding and naked lights	214
Oil-free and oil-lubricated compressors	122
Operating pressure, compressed air	127
Operating theatre supplies	34, 41, 44
Operating theatres, special P.M.G. and V. fittings for	15
Operational considerations	3
Organisation of maintenance	255
Overhauls	253
Oxygen	
consumption rate	30, App. 6
flow rates for hyperbaric chambers	33
liquid installations	95
liquid installations, general site requirements	99
pipe line sizing	34–39, Table 5
Oxygen/nitrous oxide differentiator	248
Pathology department services	2, App. 1
Partitions, pipes passing through	72
"Permit-to-Work" system	3, 5, 29
Pipe joints	22
Pipe lines	
buried	66, 72
drainage	71
identification of	77, App. 4
protection of	64, 65
sizing	34, 51
Pipe sizing practice	54, Tables 5, 6, 7
Pipe supports	69, Table 10
Pipes, minimum sizes	58, 59
Pipes, specification for	21, 68
Plant room	
electrical installation in	207
final air filters in	152
heating of	208
site for	198
ventilation of	209
Portable flowmeters	9
Pre-filter, air, on dryer	153
Pressure	
air, at terminal units	11, 108, Table 1
air, at plant room wall	108
control at terminal units, for compressed air	119
control in plant room for compressed air	116, 127
control for special sections of the distribution system	117
drop across vacuum filters	169
drop in pipe lines	51, Tables 5, 6, 7
gauges for air dryers	155
gauges for manifolds	87
gauges on distribution system	76
loss across terminal units	13, Table 1
regulating valves for compressed air	120
regulating valves on manifold installations	82
relief valve, pipe line	84
switch settings, compressors	127
testing	220–234, App. 25, 26, 27
Preventive maintenance (P.M.)	3, 129, 170, 249
P.T.F.E. ring compressors	123
Pumps, vacuum	159, 163, App. 19, 20, 22
capacity rating	165
control system	175
noise level	167
Purging medical gas installations	246
Purity check for air	247
Purity of compressed air	112
Racks, storage, for gases	89, 90
Radiotherapy hyperbaric oxygen chamber	33
Rating capacity, of air dryer	154
Rating capacity, of vacuum plant	50, 165
Receivers, air	133
Records of maintenance	256
Recovery wards, flow rates required for	41
Reducing valves and pressure regulators for compressed air	116–120
Refrigerated air dryers (not suitable for piped medical compressed air systems)	140
Relief valve, pressure, for pipe line	84, 230
Relief valve test	230
Reservoir, vacuum	171

Subject	Paragraph No.
Restrictions on use of storage accommodation	91, 92, 197, 204–206
Reversal of vacuum pump motors	168
Risers, size of	34, 35, 38, 39, 49, App. 9
Risers and distributors, calculation of flow in	App. 10, 12
Safety	
cylinder handling	218
main principles	5
notices	214, 215
Safety and fire precautions	210, 218
Safety valves and pressure relief valves	84, 133, 155, 230
Scale of warning and alarm systems	178, Table 13
Scales of terminal units	10, App. 3
Scope	1
Separators, moisture and oil, for compressors	134
Servomex analyser	247
Shape, identification of terminal units by	11
Signalling system test	245
Signals, alarm	180, 182
Silencing of compressors and vacuum pumps	128, 167, 202
Silica gel	142, 143, 144, 146
Sites	
for gas manifold rooms	88
for liquid oxygen storage	101
for plant rooms	198
Siting of air inlet for compressors	128, 201
Size of air receivers	133
Sizing of pipe lines	54, Tables 5, 6, 7
Sodium flame test for filters	152
Solder, specification for	22
Spare pipe line	61
Special baby care unit, audible alarm for	183
Specialist firms	5
Standby manifold for air, siting of	199
Starters for compressors	156
Starters for vacuum pumps	171, 175
Sterilization of vacuum drainage trap	161
Sterilizing, general method	106
Steady light annunciating alarm system	185, App. 23
Sterility of medical compressed air	111
Storage accommodation, restrictions on use of	211
Storage capacity of manifold installations	78
Storage compounds, liquid oxygen	102
Storage racks for gases	89, 90
Storage room for other gases on hospital sites	204
Storage rooms, design of	89, 205, 206
Supports, pipework	69
Telescopic theatre fittings	15, App. 5
Temperature, ambient, effect on pressure testing	225, 234, App. 25, 26, 27
Temperature, of compressed air supplies	130
Terminal units	
arrangement at multi-service points	14
design	11
flow rates required at	31, 32, Table 3
identification of	11, App. 4
location	12
mounting height	13, Table 1
pressure drop across	11
scale	10, App. 3
Test of manifold change-over valve	243
Test of signalling system	247
Testing	
and commissioning	219
at makers works	219
for cross connection ("anti-confusion" tests)	235
for leakage in pressure systems	217, 231
for leakage in vacuum systems	228, 232
gas used for	236
pressure	222–234, App. 25, 26, 27
relief valves	230
total flow rate and delivery pressure	240, App. 28, 29
valve tightness	229
Tests of plant operation	244
Theatre fittings, location of terminal units	14
Theatre fittings, type	15, App. 5
Three-weekly tasks (maintenance)	255
Total flow rate and delivery pressure test	240, App. 28, 29
Trap, drainage (vacuum)	161
Traps on distribution systems	70
Vacuum	
capacity rating	163, 164, 165, 169
dental	2, App 2
discharge point	162, 201
gauge	174
installation plant tests	245
insulated evaporator (V.I.E.) for liquid oxygen	98
level required at terminal units	158
pipes and pumps, flow rates for	38, 44, App. 8
pipe lines, pressure drop in	51, 54, Table 7
plant layout	159, App. 19, 20
pump control system	175

Subject	Paragraph No.
Vacuum (continued)	
pumps	159, 163, App. 19, 20, 21
pumps capacity rating ..	165, 169
reservoir	171
reservoir drainage	172
service, emergency operation of	176
standard level of	158
supplies, diversity in theatres	46
systems, leakage in	222, 228, 232, 233
Valve	
box keys	29
boxes	29
boxes, location of	75
tightness tests	229
Valves	23, 24, 74
location of	28, 71, 74
mounting height	28
number required	26
Vehicle access	94, 99, Table 12
Ventilation of ducts	63
Ventilation of manifold rooms, plant rooms and full cylinder stores	209
Ventilators, patient, air or oxygen required to drive ..	34, 36
Volumetric throughput of vacuum pumps	164, 165
Walls, joints in pipes buried in ..	72
Walls, pipes passing through ..	73
Wards, supplies for	37, 44, 47, App. 8, 11
Warning and alarm system, scales of provision	178, Table 13
Water-sealed compressors ..	124
Water-sealed vacuum pumps ..	166
Water treatment plant for cooling water	124, 130, 166
Weekly tasks (maintenance) ..	255
Wiring in alarm panels ..	67, 190, 196
Wiring in booms, gas control panels, etc.	196
Workshop services	2
Works testing of plant	219

Department of Health and Social Security
Welsh Office

Prices in brackets include postage
Binders for this Series of Notes are available price 30p (38½p)
Department of Health and Social Security and Welsh Office hospital guidance publications include:
Hospital Building Notes, Design Notes, Equipment Notes, Building Bulletins and Technical Memoranda

Government publications can be purchased from the Government Bookshops in London (post orders to PO Box 569 SE1), Edinburgh, Cardiff, Belfast, Manchester, Birmingham and Bristol, or through booksellers

Hospital Technical Memoranda

1 Anti-static precautions: rubber, plastics and fabrics (revised 1971) 13p (15½p)

2 Anti-static precautions: flooring in anaesthetising areas (revised 1971) 11p (13½p)

3 Fire precautions: fish fryers *Now contained in No.* 16

4 Colour code of flexible cables and cords 2½p (5p)

5 Steam boiler plant instrumentation 7½p (10p)

6 Protection of condensate systems: filming amines (revised 1970) 5p (7½p)

7 Electrical services—supply and distribution 37½p (43p)

8 Safety code for electro-medical apparatus (revised 1969) 25p (27½p)

9 Pneumatic tube communication systems 7½p (10p)

10 Pressure steam sterilizers (revised 1968) 19p (23½p)

11 Emergency electrical services 25p (29½p)

12 Maintenance of buildings, plant and equipment 20p (22½p)

13 Planned preventive maintenance: a system for engineering plant and services 45p (50½p)

14 Abatement of electrical interference 20p (22½p)

15 Patient/Nurse call systems 22½p (27p)

16 Fire precautions (revised 1969) 35p (39½p)

17 Commissioning of hospital engineering services 5p (7½p)

Supplements
1 Air conditioning and ventilation 60p (64½p)
2 Miscellaneous components 75p (80½p)
3 Boiler plant 40p (42½p)
4 Communication services 35p (37½p)
5 Sterilizers and disinfectors 35p (37½p)
6 Electrical installations 60p (64½p)
7 Heating 45p (47½p)
8 Kitchens 47½p (52p)
9 Laundries 50p (54½p)
10 Lifts and escalators 60p (64½p)
11 Fire Service systems 42½p (45p)
12 Hot and cold water services 35p (37½p)
13 Workshops 47½p (52p)
14 Mechanical and electrical medical plant 65p (69½p)
15 Medical gases and suction systems 35p (37½p)
16 Sewerage and drainage 32½p (35p)

18 Facsimile telegraphy: possible applications in district general hospitals 12½p (15p)

19 Facsimile telegraphy: the transmission of pathology reports within a hospital—a case study 17½p (20p)

20 Staff location systems 10p (12½p)

21 Safety code for high voltage installations 30p (32½p)

Printed in England for Her Majesty's Stationery Office
By McCorquodale Printers Limited, London

HM 5113 Dd. 502579 K32 5/72 McC 3309

© *Crown copyright* 1971

Published by
Her Majesty's Stationery Office

To be purchased from
49 High Holborn, London WC1V 6HB
13a Castle Street, Edinburgh EH2 3AR
109 St Mary Street, Cardiff CF1 1JW
Brazennose Street, Manchester M60 8AS
50 Fairfax Street, Bristol BS1 3DE
258 Broad Street, Birmingham B1 2HE
80 Chichester Street, Belfast BT1 4JY
or through booksellers

SBN 11 320468 X